SPO12
Standard/Hummer/Sprinter

Two Post Surface Mounted Swing Arm Frame Engaging Lift

Standard (500 Series) Capacity: 12,000 lbs.
Hummer (5W0 Series) Capacity: 12,000 lbs.
Sprinter (5A0 Series) Capacity: 9,000 lbs.

PARTS BREAKDOWN

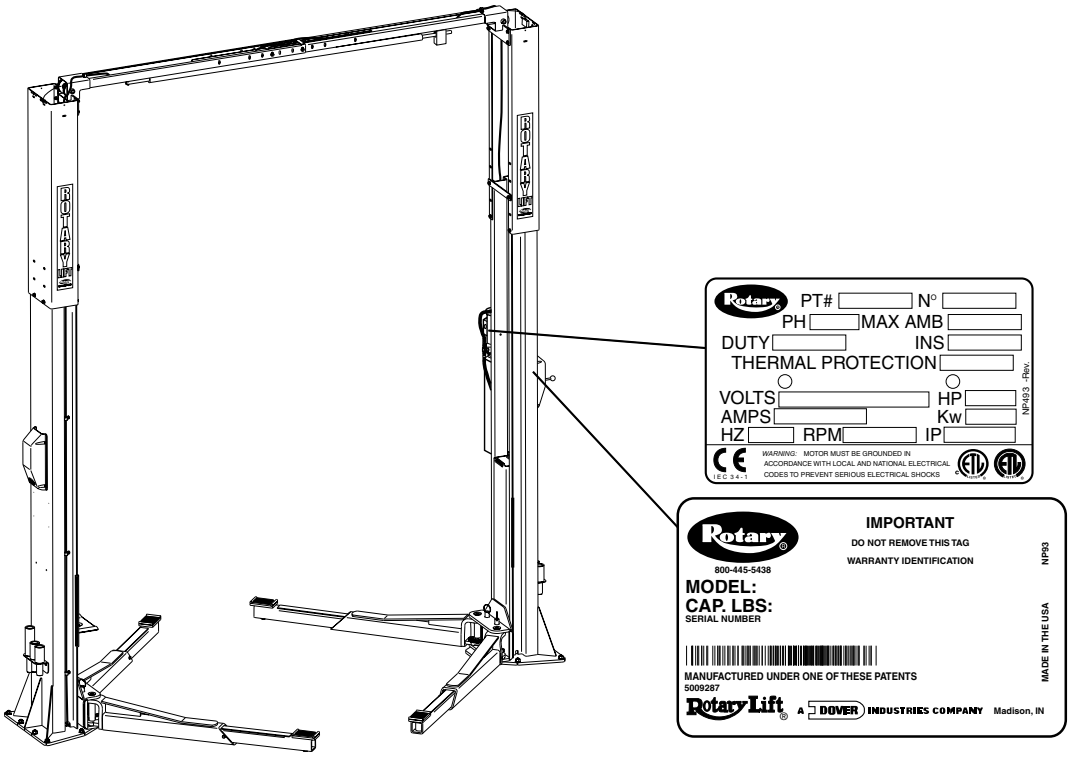

IMPORTANT: When ordering parts or requesting service always give exact model and power unit serial number. Model number is shown on nameplate attached to power unit column. Power unit serial number is located on side of power unit.

OWNERS RECORD
Complete information at right and keep in a safe place.

Date Installed _____

Installed in Bay # _____

Power Unit Serial # _____

Power Unit Model # _____

Lift Serial # _____

Lift Model # _____

NOTE: For replacement parts -See your nearest Rotary Parts Distributor.

© September 2007 by Rotary Lift. All rights reserved. CO6953.6 **LP20189**

PB2-2-30-5
Rev. P 9/11/2007

1	L.H. Column Weldment	N754
2	R.H. Column Weldment	N757
3	Column Extension	
	Low Ceiling MODEL (500/5A0 Series)	N495
	Standard Height MODEL (500/5A0 Series)	N477
	EH-1 MODEL (500/5A0/5W0 Series)	N478
	EH-2 MODEL (500/5A0/5W0 Series)	N479
4	Carriage Yoke Weldment	N826
5	Arm Pin	N2154
6	3/8"-16NC x 1" Carriage Bolt	N/A
7	Hydraulic Cylinder	
	68" Rise	N380
	71" Rise	N382
8	Power Unit	
	SINGLE PHASE	*P1391/P3391
	4 HP SINGLE PHASE	P3500
	THREE PHASE	*P1395/P3395
	575 Volt	*P1360/P3360
9	Power Unit Hose	FJ837
10	5/16”-18NC x 1-1/2” Bolt	40271
11	5/16” External Tooth Lockwasher	40854
12	5/16”-18NC Hex Nut	40670
13	Actuator Pin Handle	FJ7985-1
14	Actuator Pin	N121-1
15	Retaining Pin	N119-3
16	Arm Restraint Spring	FJ7656-2
17	Bleeder Screw (Specify Manufacturer)	2REQ'D
18	Carriage Bumper	FJ7391-2
19	Arm Restraint Panel	N2121
20	Approach Bumper (door-18” Lg-2 req’d)	FJ7391-1
21	5/8”-11NC Hex Nylon Insert Locknut	40743
22	Truarc #5304-75 Klipring for 3/4” Shaft	41411
23	Sheave	N417-1
24	1/4”-20NC Zinc Hex Nut	40627
25	Sheave Cover	N119-1
26	1/4”-20NC x 3/8” Lg. PHMS Plated (2 pcs.)	40063
27	Slider block	FJ7360
28	3/4” Concrete Anchor (14 req’d)	FJ7380
29	1-1/2” O.D. x .760-.770” I.D. x .045” Thick	41388
	Mach. Bushing	
30	N/A	N/A
31	1/4”-20NC Insert Locknut	41423
32	1/8” x 1” Lg. Cotter Pin (3Ø Only)	41200
33	Switch Bar Assembly	
	1Ø	N467
	3Ø	N434
34	Spotting Wheel Dish Kit	FF729
35	Actuator Assembly (3Ø Only)	N432-5
36	3/8”-16 NC x 3/4” Long Flanged HHCS	40124
37*	Arm Restraint Kit (1 arm)	*N2148
38	Overhead Hose	
	Low Ceiling MODEL (500/5A0 Series)	FJ839
	Standard Height MODEL (500/5A0 Series)	FJ843
	EH-1 MODEL (500/5A0/5W0 Series)	FJ844
	EH-2 MODEL (500/5A0/5W0 Series)	FJ845
39	Equalizer Cables	
	Low Ceiling MODEL (500/5A0 Series)	N390
	Standard Height (500/5A0 Series)	N387
	EH-1 MODEL (500/5A0/5W0 Series)	N388
	EH-2 MODEL (500/5A0/5W0 Series)	N389
40	N/A	N/A
41	Locking Latch Cable	
	Standard Height Model (500/5A0 Series)	FJ7595-1
	EH-1/EH-2 Models (500/5A0/5W0 Series)	FJ7600
42	Capacitor Box	FA7147-1
	Capacitor Box Cover Plate	FA7366-1
	Drum Switch	FA7364
	Drum Switch Lever	FA7364-1
	M5 x 45 PHMS, Plated	41672
43	3/8”-16NC Flanged Locknut	40664
44	Sheave Shaft	FJ7444-8
45	1/4”-20NC x 2-3/4” HHCS Grade 5	40114

46	Latch Cable Guide	N69
47	Hose Clip	N383
48	1/4" Flat Washer	40795
49	5/16"-18NC x 3/8" PHMS (6 req'd-Column)	40227
50	Branch Tee	FJ7668
51	3/8"-16NC x 2-1/2" Lg. Carriage Bolt	40183
52	Tie Bar	N1162-1
53	1/4”-20NC Flanged Locknut	40641
54	3/4” Spacer	FJ7871
55	3/8"-16NC x 3/4" Lg. Carriage Bolt	40696
56	1/4” External Tooth Lockwasher	40779
57	3/8” External Tooth Lockwasher	40845
58	Spring Pin-1/4" dia. x 1-1/2" Lg. (Stainless)	14427
59	1/4”-20NC x 1” HHCS Grade 5	40108
60	Cable Guide	N618
61	Cable End Bracket	N619
62	Stiffener Angle	
	(500/5AO Series)	N417-3
	(5W0 Series)	N463
63	Column Mounting Bracket	N440
64	3/8"-16NC Flanged Locknut	40664
65	Limit Switch Assembly (use with Control Panel P.U.)	
	1Ø	N413
	3Ø	N432
66	L.H. Overhead Weldment (Outer)	
	(500/5A0 Series)	N480-1
	(5W0 Series)	N493-1
67	R.H. Overhead Weldment (Inner)	
	(500/5A0 Series)	N481-1
	(5W0 Series)	N494-1

* Includes items 13, 14, 15, 16, 19, 35, 58, 60, 61

NOTE: Standard hardware items should be purchased from local hardware source when possible.

⚠CAUTION Care should be taken to use hardware equal to that specified in this listing. (If grade is not specified, use Grade 2 minimum.)

*** Two different power units were used. Please verify your exact model number before ordering replacement parts.**

SPO12 500 Series Superstructure

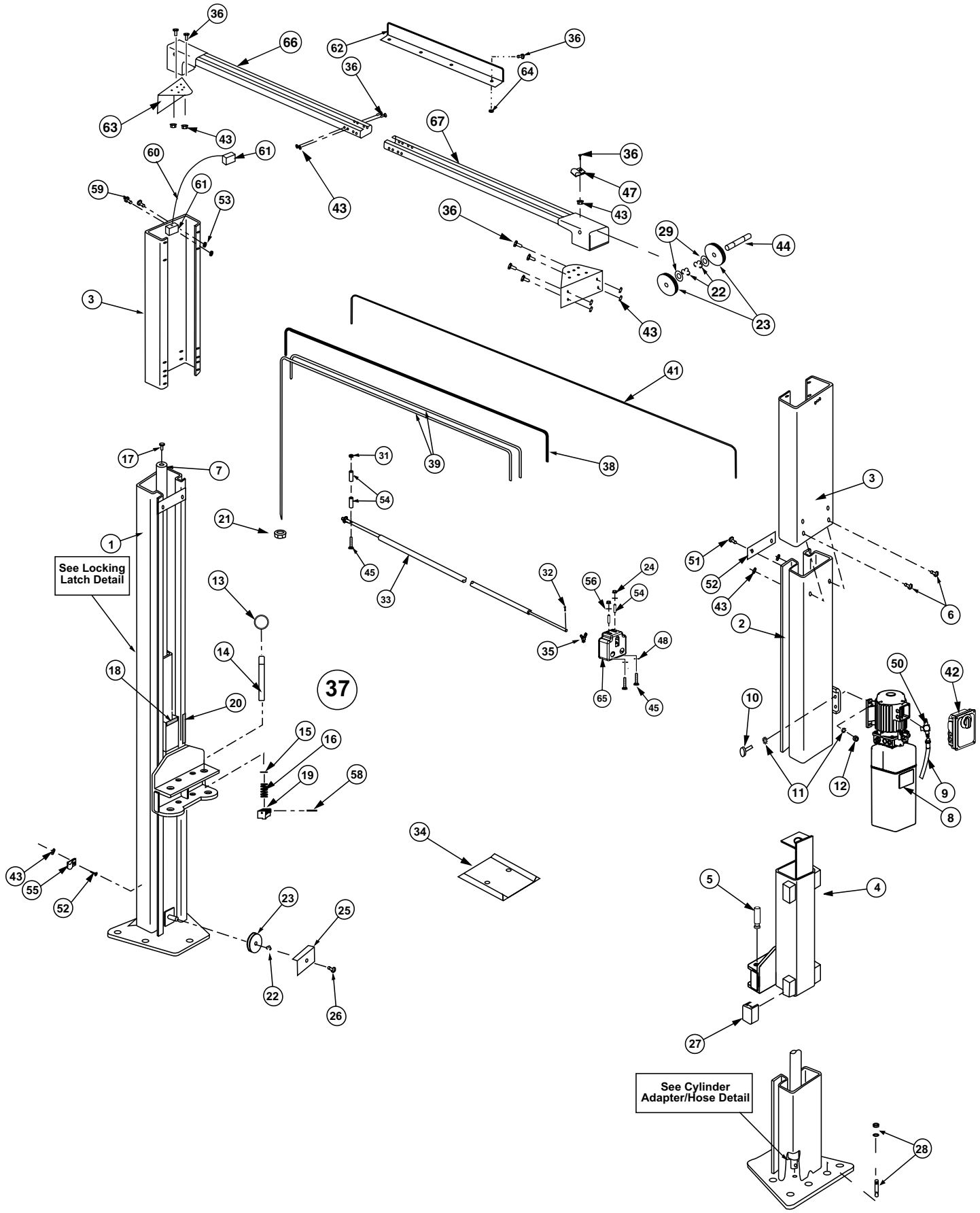

Standard 500 Series/Hummer 5W0 Series

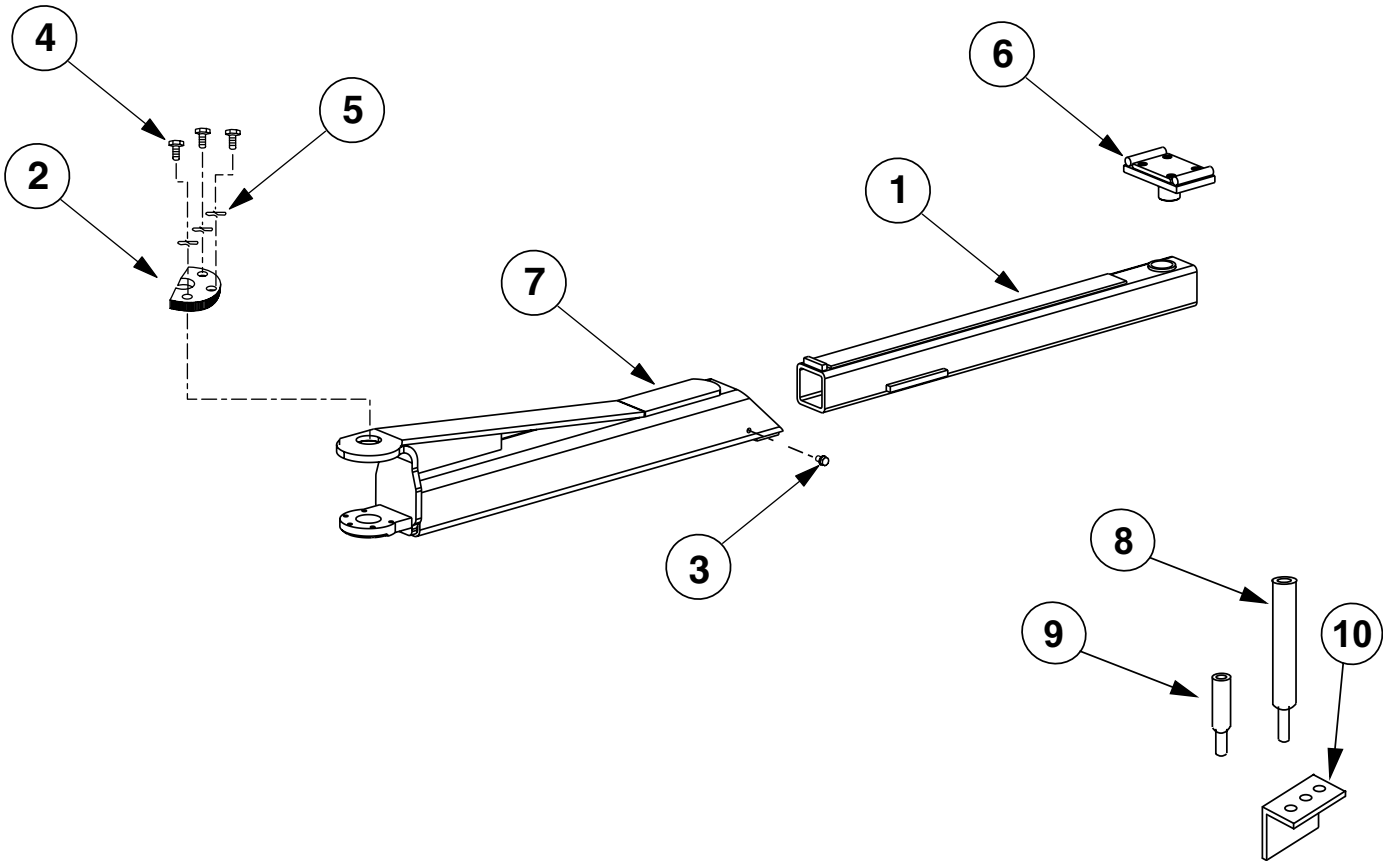

1. Inner Arm N2176-2
2. Arm Restraint Gear N2122
3. Stop Bolt N219
4. 3/8"-16NC x 1-1/2" HHCS Grade 5 40200
5. 3/8" Spring Washers 40818
6. Adapter FJ6158
7. Outer Arm N2176-1
8. 8" Adapter Extension FJ6144
9. 4" Adapter Extension FJ6143
10. Adapter Rack FJ6145

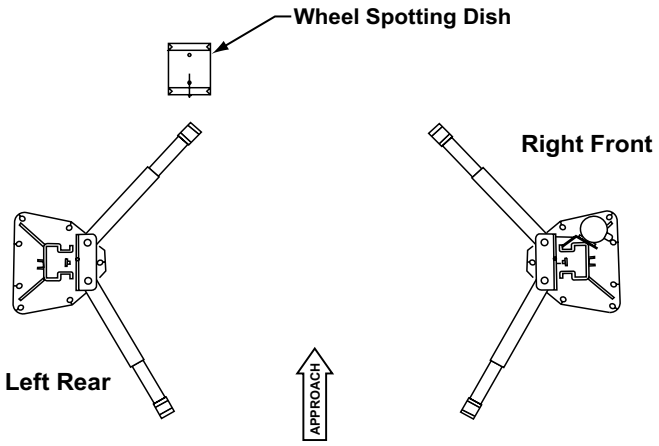

SPO12 STANDARD/SPO12 HUMMER PLAN VIEW

Sprinter 5A0 Series

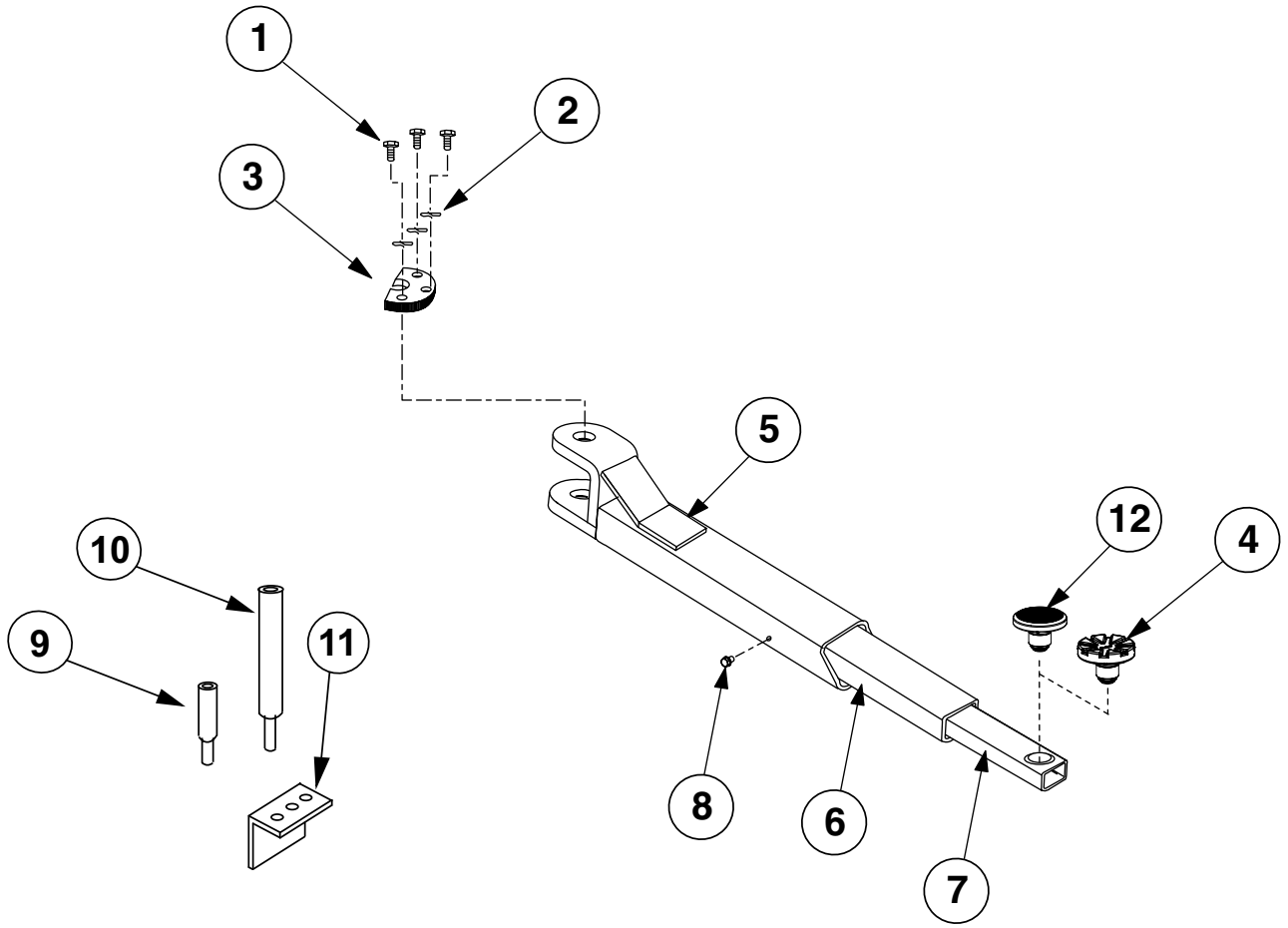

1. 3/8"-16NC x 1-1/2" HHCS Grade 5 40200
2. 3/8" Spring Washers..... 40818
3. Restraint Gear N2122
4. Adapter..... FJ6166
5. Outer Arm N2196-1
6. Middle Arm N27-14
7. Inner Arm..... N27-15
8. Stop Bolt..... N219
9. 90mm Adapter Extension FJ6171-1
10. 130mm Adapter Extension FJ6171-2
11. Adapter Rack..... FJ6127
12. Low Profile Adapter FJ6202

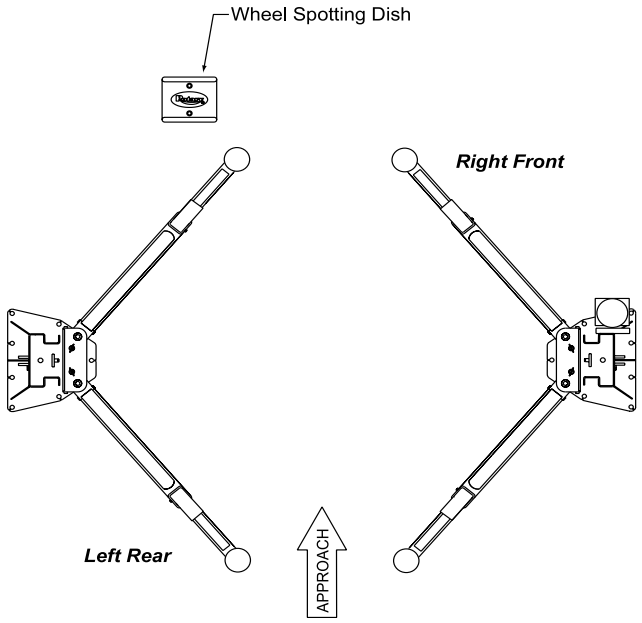

SPO12 SPRINTER PLAN VIEW

Locking Latch Detail (Right Column)

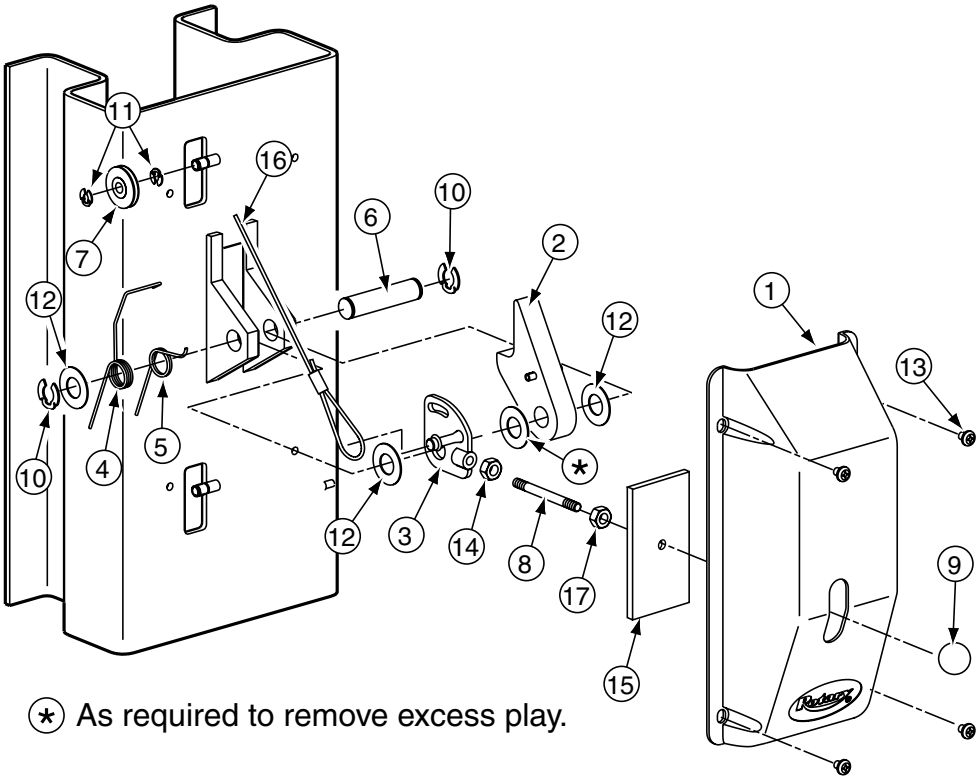

(*) As required to remove excess play.

ITEM	DESCRIPTION	PART#
1.	Control Side Cover	FJ7452
2.	Locking Latch Dog	N615
3.	Control Plate	FJ7594-2
4.	Spring	FJ7566-10
5.	Spring	FJ7382-9
6.	Latch Shaft	FJ7382-34
7.	Locking Latch Sheave	FJ7322
8.	Handle	FJ7382-18
9.	Ball Handle	FC134-91
10.	Truarc Klipring #5304-75 for 3/4" Shaft	41411
11.	Truarc Klipring #5304-37 for 3/8" Shaft	41410
12.	1-1/2" O.D. x 3/4" I.D. x .045" Mach. Bush.	41388
13.	5/16"-18NC x 3/8" Lg. PHMS	40227
14.	3/8" - 16NC Hex Jam Nut	40658
15.	Slot Cover	N617
16.	Locking Latch Cable	FJ7600
17.	1/2"-13NC Jam Nut (Spacer)	40700

Locking Latch Detail (Left Column)

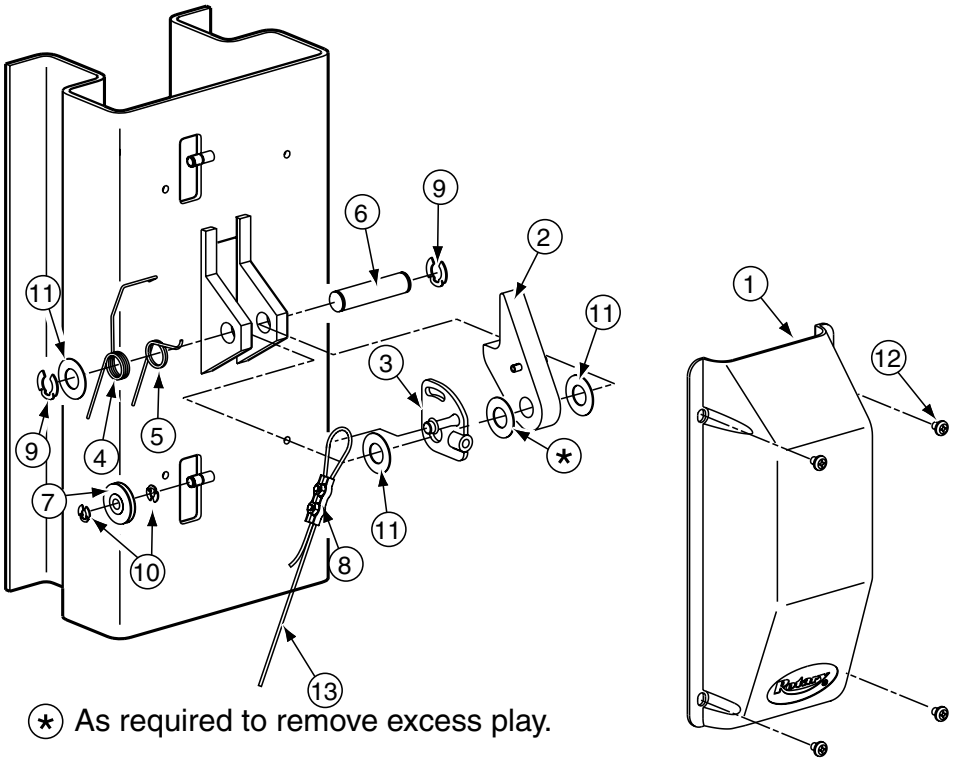

* As required to remove excess play.

ITEM	DESCRIPTION	PART#
1.	Latch Cover	FJ7451
2.	Locking Latch Dog	N615
3.	Control Plate	FJ7594-2
4.	Spring	FJ7566-10
5.	Spring	FJ7382-9
6.	Latch Shaft	FJ7382-34
7.	Locking Latch Sheave	FJ7322
8.	Latch Cable Clamp	N63-1
9.	Truarc Klipring #5304-75 for 3/4" Shaft	41411
10.	Truarc Klipring #5304-37 for 3/8" Shaft	41410
11.	1-1/2" O.D. x 3/4" I.D. x .045" Mach. Bush.	41388
12.	5/16"-18NC x 3/8" Lg. PHMS	40227
13.	Locking Latch Cable	FJ7600

Cylinder Hose Adapter Detail

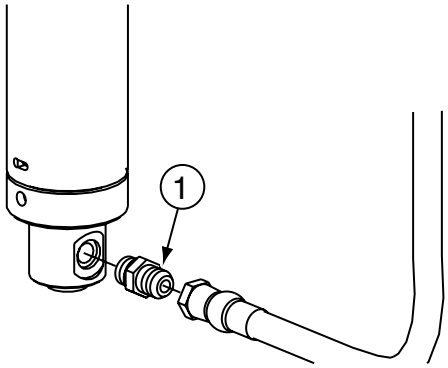

ITEM	DESCRIPTION	PART#
1.	Straight Adapter	FJ7352-3

DATE	REV.	CHANGE MADE
08/11/2005	H	Added FJ6202 Low Profile Adapter, N615 Locking Latch Dog was N165-1 and updated FJ7594-2 Control Plate.
01/16/2006	J	Updated Locking Latch Cable part number. Rev letter I skipped.
08/14/2006	K	Updated power unit part numbers and added barcode.
12/14/2006	L	Added 4HP Single Phase Power Unit.
09/11/2007	O	Updated capacitor box part numbers.

Rotary World Headquarters
2700 Lanier Drive
Madison, IN 47250, USA
www.rotarylift.com

North America Contact Information
Tech. Support: p 800.445.5438
f 800.578.5438
e userlink@rotarylift.com
Sales: p 800.640.5438
f 800.578.5438
e userlink@rotarylift.com

World Wide Contact Information
World Headquarters/USA: 1.812.273.1622
Canada: 1.905.812.9920
European Headquarters/Germany: +49.771.9233.0
United Kingdom: +44.178.747.7711
Australasia: +60.3.7660.0285
Latin America / Caribbean: +54.3488.431.608
Middle East / Northern Africa: +49.771.9233.0

© Rotary®, Printed in U.S.A., All Rights Reserved. Unless otherwise indicated, ROTARY, DOVER and all other trademarks are property of Dover Corporation and its affiliates.