AcanUS AUTOMOTIVE EQUIPMENT

Exploded Parts List

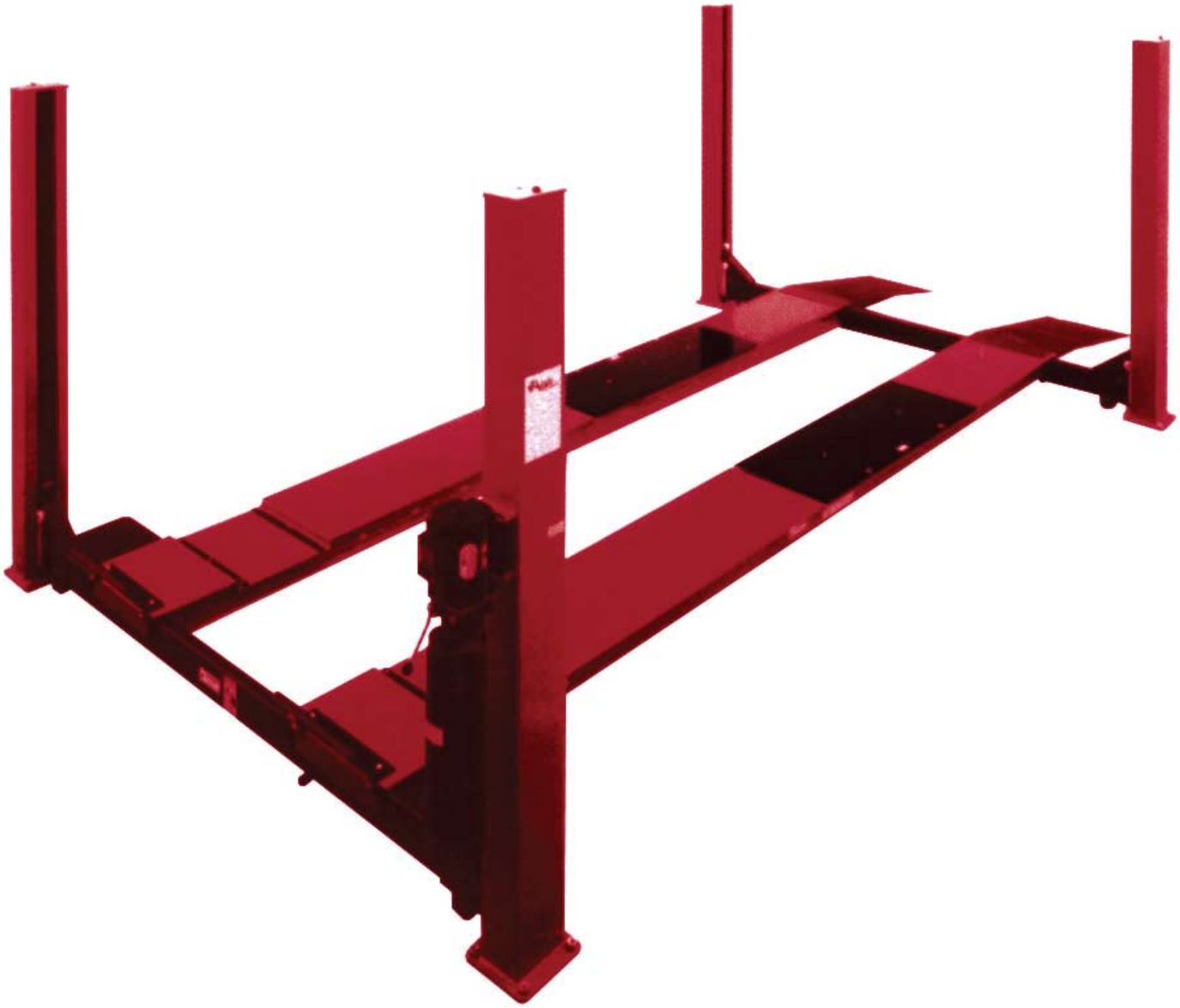

allpart supply, inc.

1.800.381.1330 • www.allpartsupply.com

PULLEY ASSEMBLY DIAGRAMS

STANDARD WIDTH 168 - SHORT

RIGHT REAR PULLEY ASSEMBLY

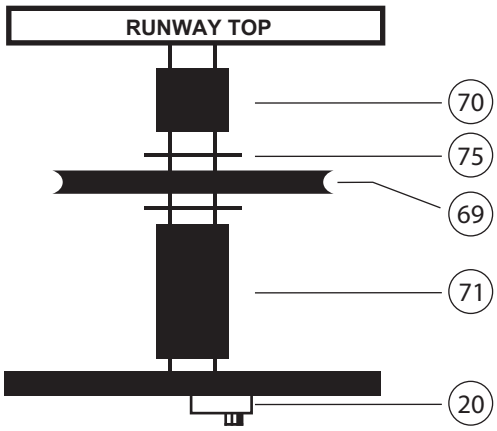

GANG PULLEY LEFT REAR RUNWAY

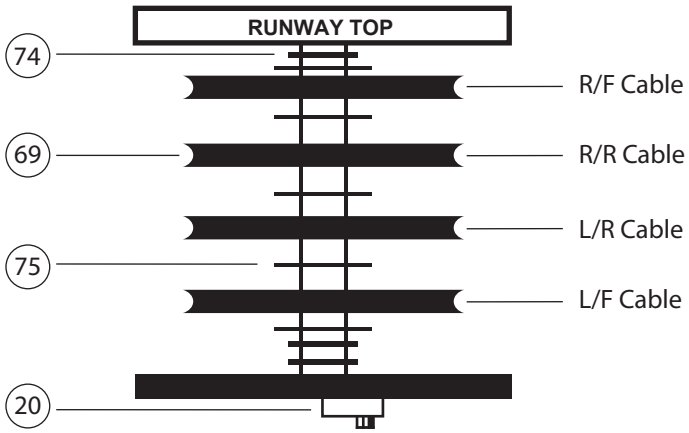

RIGHT AND LEFT FRONT PULLEY ASSEMBLY

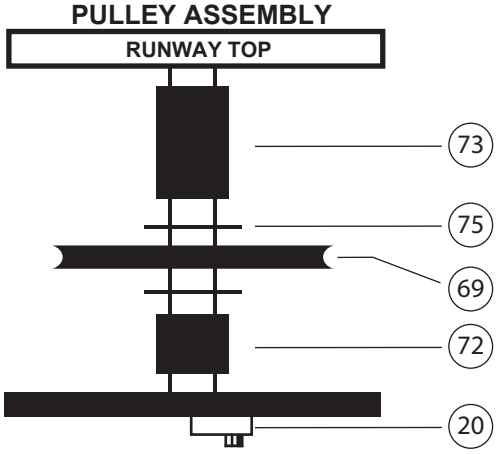

CROSSMEMBER PULLEY

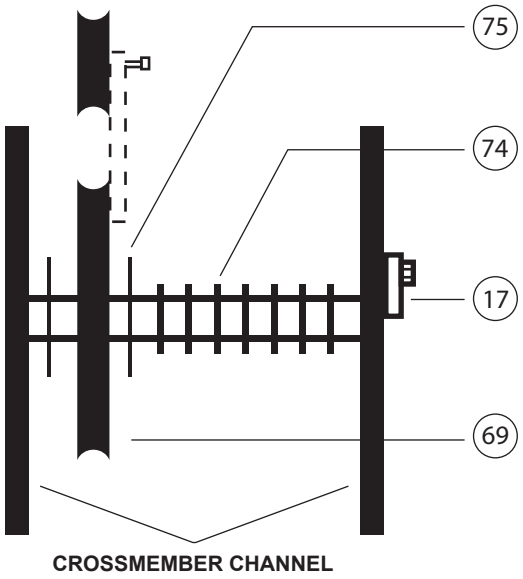

ITEM	PART NUMBER	DESCRIPTION
17	SP10-PC-005	Pulley Pin - Crossmember
20	SP10-PC-472	Pulley Pin - Runway
69	SP10-PC-017	Pulley Assembly
70	SP10-PC-020	1” Pulley Spacer
71	SP10-PC-460	3” Pulley Spacer
72	SP10-PC-018	1 1/2” Pulley Spacer
73	SP10-PC-019	2 5/8” Pulley Spacer
74	SP10-PC-022	1/8” Spacer Washer
75	SP10-PC-214	Thrust Washer - Nylon

ALLPART SUPPLY, INC.
1-800-381-1330 - Fax 817-284-2935

© 2008 ALLPART SUPPLY, INC.

CABLE ROUTING

ALTERNATIVE SYSTEM

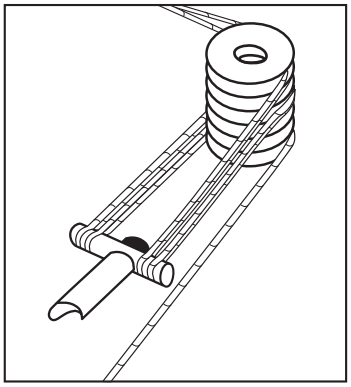

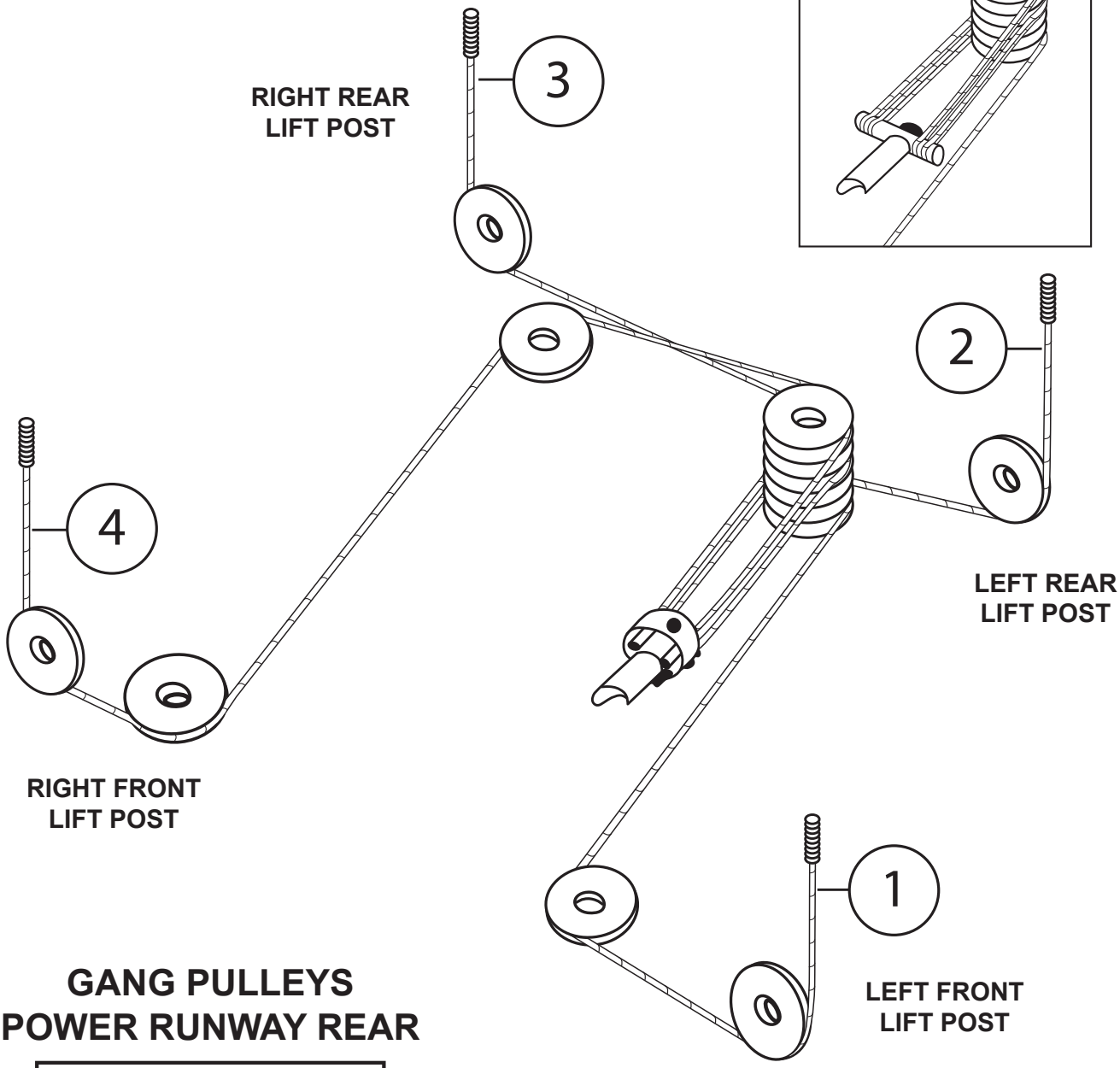

GANG PULLEYS
POWER RUNWAY REAR

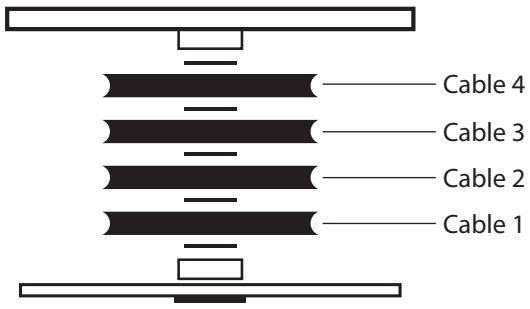

ALLPART SUPPLY, INC.
1-800-381-1330 - Fax 817-284-2935

© 2008 ALLPART SUPPLY, INC.

ACANUS LIFT CABLES

MODEL: 12K LIFT

THE CABLES LISTED BELOW ARE ALSO FOR 15,000lb CLOSED
END FLAT DECK LIFTS OF CORRESPONDING LENGTH

STANDARD WIDTH 168 - SHORT

CABLE NUMBER	POST POSITION	LENGTH	PART NUMBER
1	LEFT FRONT	313”	SP10-CB-011
2	LEFT REAR	146”	SP10-CB-012
3	RIGHT REAR	199”	SP10-CB-013
4	RIGHT FRONT	365”	SP10-CB-014

STANDARD WIDTH 204 - LONG

CABLE NUMBER	POST POSITION	LENGTH	PART NUMBER
1	LEFT FRONT	381”	SP12-CB-007
2	LEFT REAR	183”	SP12-CB-008
3	RIGHT REAR	236”	SP12-CB-009
4	RIGHT FRONT	433”	SP12-CB-010

NARROW WIDTH 168 - SHORT

CABLE NUMBER	POST POSITION	LENGTH	PART NUMBER
1	LEFT FRONT	307”	SP12-CB-020
2	LEFT REAR	140”	SP12-CB-021
3	RIGHT REAR	193”	SP12-CB-022
4	RIGHT FRONT	359”	SP12-CB-023

NARROW WIDTH 204 - LONG

CABLE NUMBER	POST POSITION	LENGTH	PART NUMBER
1	LEFT FRONT	375”	SP12-CB-024
2	LEFT REAR	177”	SP12-CB-025
3	RIGHT REAR	230”	SP12-CB-026
4	RIGHT FRONT	427”	SP12-CB-027

ALLPART SUPPLY, INC.
1-800-381-1330 - Fax 817-284-2935

© 2008 ALLPART SUPPLY, INC.

ACANUS LIFT CABLES

MODEL: 15K LIFT

ANY OTHER LENGTH OF 15,000lb LIFT THAN DESCRIBED
BELOW IS SPECIAL ORDER ONLY

STANDARD WIDTH 204 - LONG

CABLE NUMBER	POST POSITION	LENGTH	PART NUMBER
1	LEFT FRONT	385”	SP15-CB-001
2	LEFT REAR	187”	SP15-CB-002
3	RIGHT REAR	240”	SP15-CB-003
4	RIGHT FRONT	437”	SP15-CB-004

STANDARD WIDTH 240 - EXTENDED

CABLE NUMBER	POST POSITION	LENGTH	PART NUMBER
1	LEFT FRONT	457”	SP15-CB-005
2	LEFT REAR	223”	SP15-CB-006
3	RIGHT REAR	276”	SP15-CB-007
4	RIGHT FRONT	509”	SP15-CB-008

NARROW WIDTH 204 - LONG

CABLE NUMBER	POST POSITION	LENGTH	PART NUMBER
1	LEFT FRONT	379”	SP15-CB-001N
2	LEFT REAR	181”	SP15-CB-002N
3	RIGHT REAR	234”	SP15-CB-003N
4	RIGHT FRONT	431”	SP15-CB-004N

NARROW WIDTH 240 - EXTENDED

CABLE NUMBER	POST POSITION	LENGTH	PART NUMBER
1	LEFT FRONT	451”	SP15-CB-005N
2	LEFT REAR	217”	SP15-CB-006N
3	RIGHT REAR	270”	SP15-CB-007N
4	RIGHT FRONT	503”	SP15-CB-008N

ALLPART SUPPLY, INC.
1-800-381-1330 - Fax 817-284-2935

© 2008 ALLPART SUPPLY, INC.

LIFT DIMENSIONS

CHECK DIMENSIONS FOR MODEL OF LIFT ON NEXT PAGE

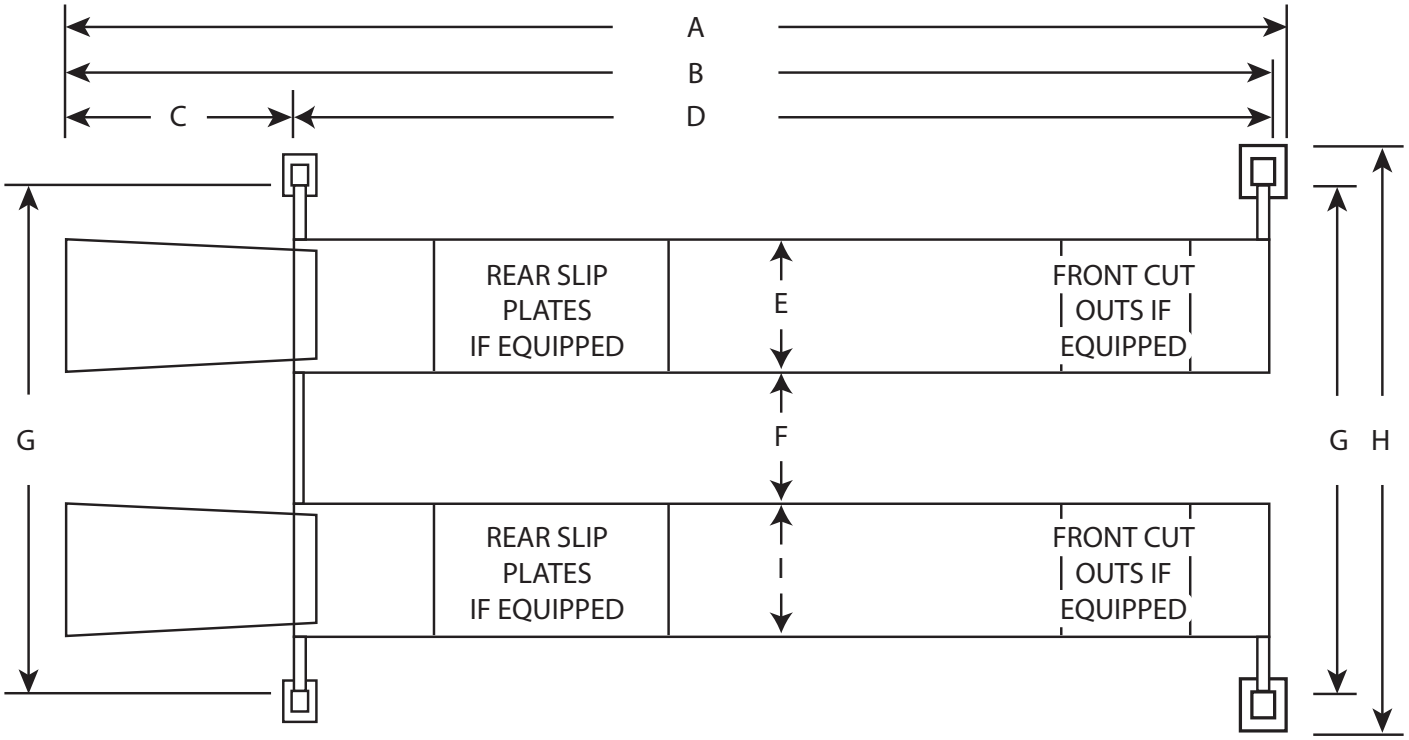

ALLPART SUPPLY, INC.
1-800-381-1330 - Fax 817-284-2935

© 2008 ALLPART SUPPLY, INC.

LIFT DIMENSIONS

Standard Open End 168 - Short

MODEL	STANDARD LENGTH	METRIC LENGTH
A	216”	548.64cm
B	212”	538.48cm
C	40”	101.60cm
D	172”	436.88cm
E	22”	55.88cm
F	36”	91.44cm
G	120”	304.80cm
H	141.75”	360.05cm

Standard Open End 204 - Long

MODEL	STANDARD LENGTH	METRIC LENGTH
A	252”	640.08cm
B	248”	629.92cm
C	40”	101.60cm
D	208”	528.32cm
E	22”	55.88cm
F	36”	91.44cm
G	120”	304.80cm
H	141.75”	360.045cm

Narrow Open End 168 - Short

MODEL	STANDARD LENGTH	METRIC LENGTH
A	216”	548.64cm
B	212”	538.48cm
C	40”	101.60cm
D	172”	436.88cm
E	22”	55.88cm
F	36”	91.44cm
G	108”	274.32cm
H	129.75”	329.57cm

Narrow Open End 204 - Long

MODEL	STANDARD LENGTH	METRIC LENGTH
A	252”	640.08cm
B	248”	629.92cm
C	40”	101.60cm
D	208”	528.32cm
E	22”	55.88cm
F	36”	91.44cm
G	108”	274.32cm
H	129.75”	329.57cm

ALLPART SUPPLY, INC.
1-800-381-1330 - Fax 817-284-2935

© 2008 ALLPART SUPPLY, INC.

LIFT DIMENSIONS CONT'D

Standard Open End 240 - Extended

MODEL	STANDARD LENGTH	METRIC LENGTH
A	288"	731.52cm
B	284"	721.36cm
C	40"	101.60cm
D	244"	619.76cm
E	22"	55.88cm
F	36"	91.44cm
G	120"	304.80cm
H	141.75"	360.05cm

Narrow Open End 240 - Extended

MODEL	STANDARD LENGTH	METRIC LENGTH
A	288"	731.52cm
B	284"	721.36cm
C	40"	101.60cm
D	244"	619.76cm
E	22"	55.88cm
F	36"	91.44cm
G	108"	274.32cm
H	129.75"	329.57cm

© 2008 ALLPART SUPPLY, INC.

ACANUS LIFTS Hoist Schematics

HOIST PARTS ILLUSTRATIONS 1 & 2

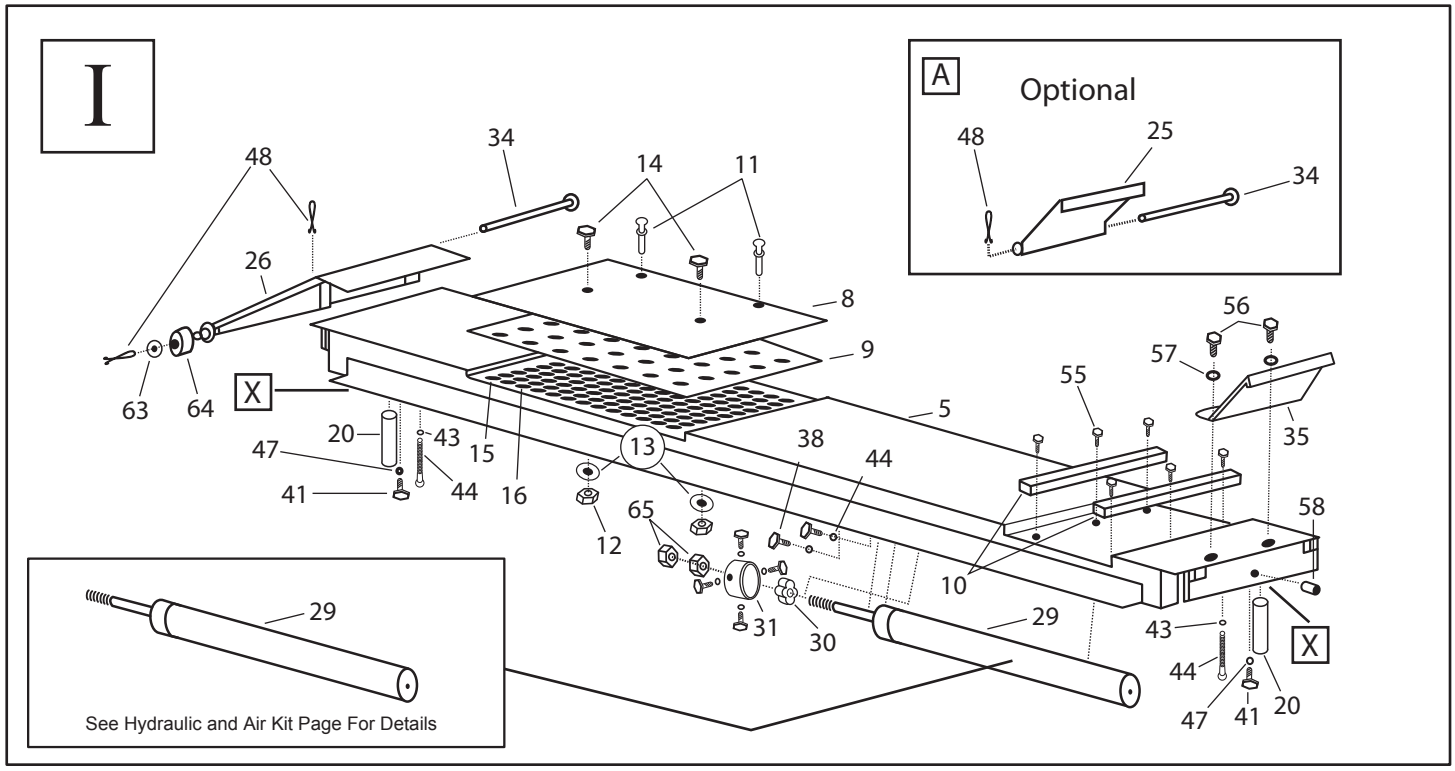

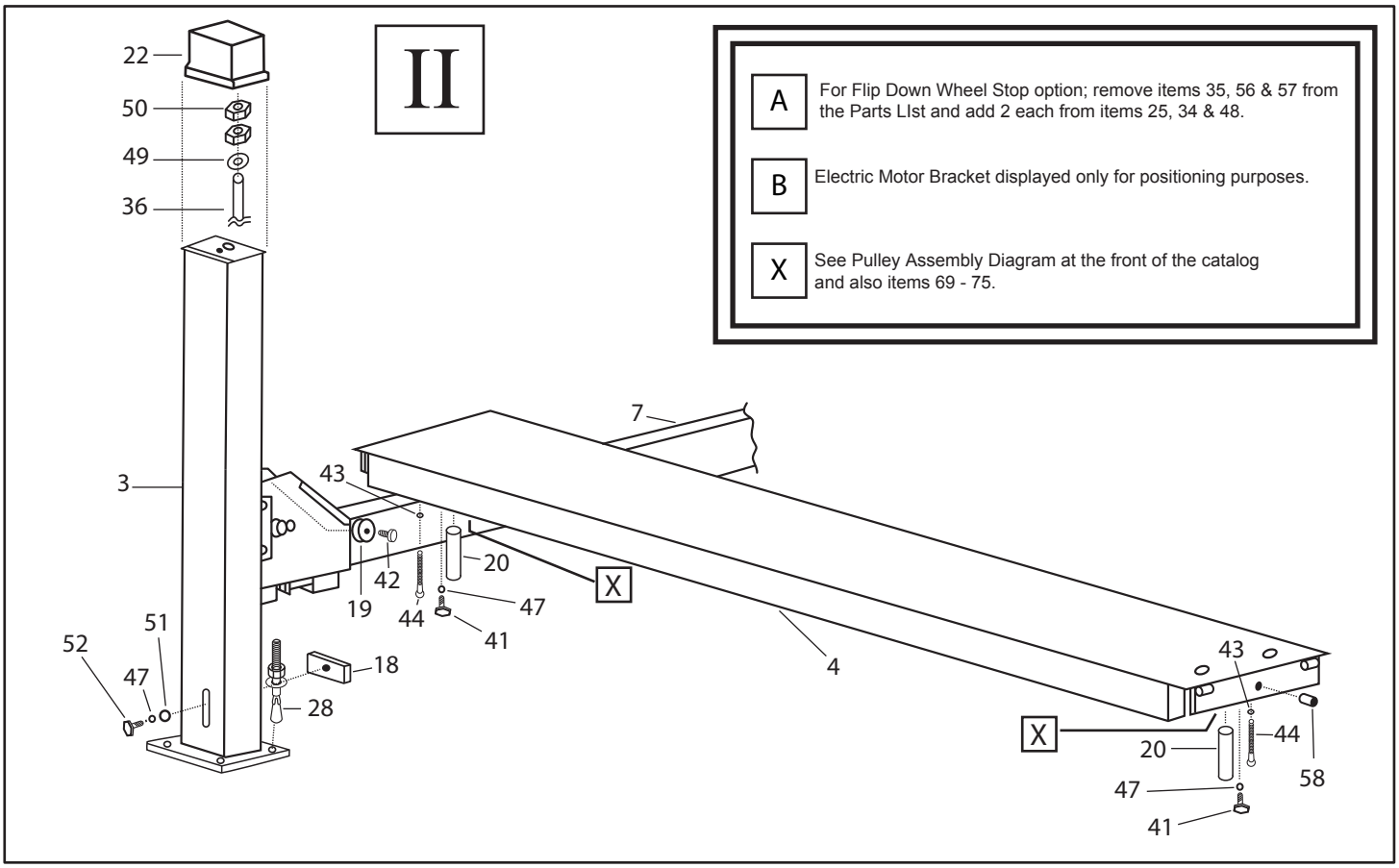

ALLPART SUPPLY, INC.
1-800-381-1330 - Fax 817-284-2935

© 2008 ALLPART SUPPLY, INC.

ACANUS LIFTS Hoist Schematics

HOIST PARTS ILLUSTRATIONS 3,4,5 and 6

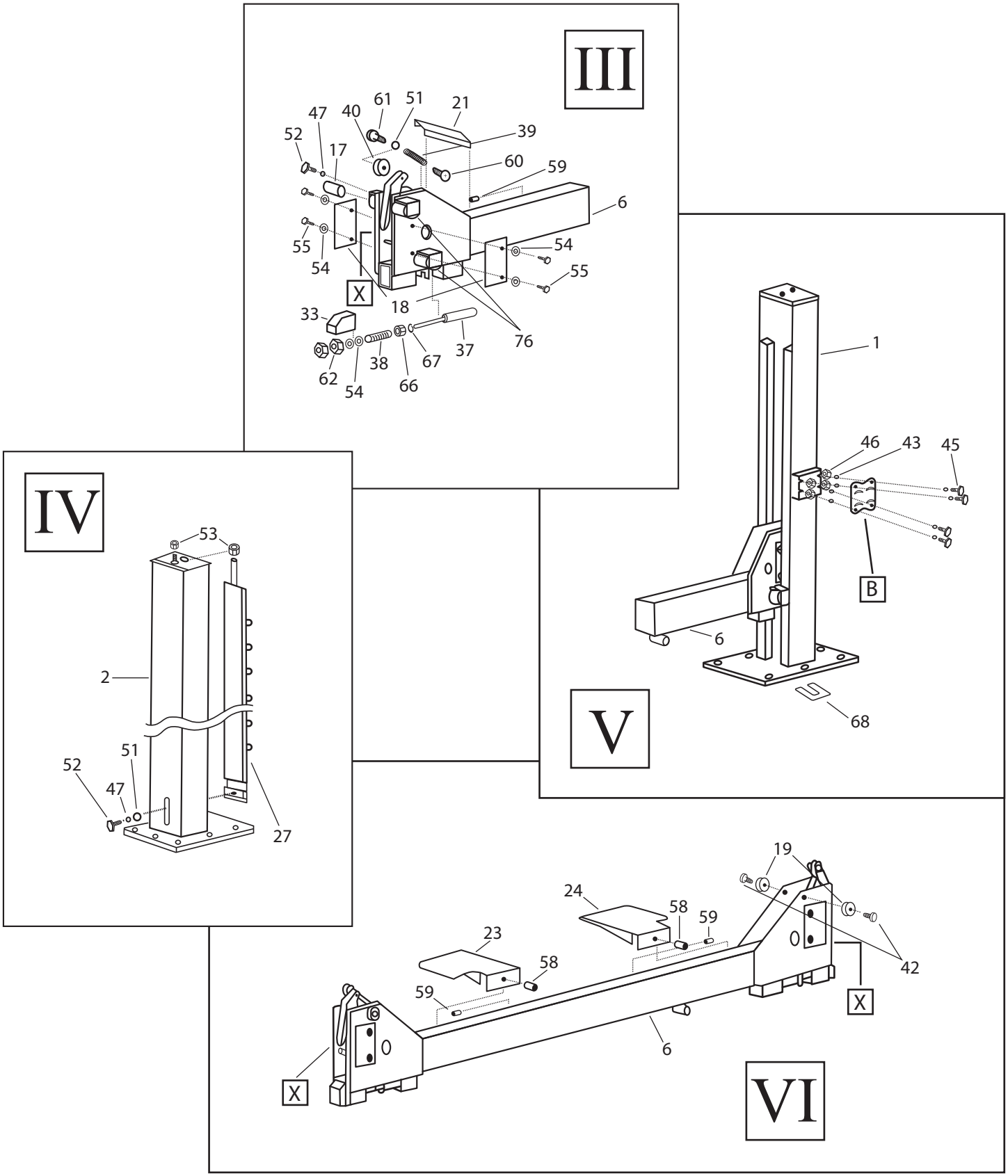

ALLPART SUPPLY, INC.
1-800-381-1330 - Fax 817-284-2935

© 2008 ALLPART SUPPLY, INC.

ACANUS LIFTS Hoist Parts

12K FOUR POST HOIST PARTS

ITEM	PART NUMBER	DESCRIPTION
1	SP10-FP-070	Power Post - Open End
1	SP10-FP-073	Power Post - Closed End
2	SP10-SP-070	Slave Post - Open End
3	SP10-PT-091	Standard Post - Open End
3	SP10-PT-091	Standard Post - Closed End
4	SP12-SR-701	Slave Runway - 168 Alignment
4	SP12-SR-474	Slave Runway - 204 Alignment
4	FT12-SR-701	Slave Runway - 168 Flat Deck
4	FT12-SR-100	Slave Runway - 204 Flat Deck
5	SP12-PR-701	Power Runway - 168 Alignment
5	SP12-PR-450	Power Runway - 204 Alignment
5	FT12-PR-701	Power Runway - 168 Flat Deck
5	FT12-PR-100	Power Runway - 204 Flat Deck
6	SP10-SC-216	Open End Front Crossmember - Slave
6	SP12-SC-100	Open End Front Crossmember - Slave Narrow
6	SP10-PC-216	Open End Front Crossmember - Power
6	SP12-PC-003	Open End Front Crossmember - Power Narrow
6	SP12-PC-200	Closed End Front Crossmember
6	SP12-PC-004	Closed End Front Crossmember - Narrow
7	SP12-RC-200	Rear Crossmember
7	SP12-RC-005	Rear Crossmember - Narrow

15K FOUR POST HOIST PARTS

ITEM	PART NUMBER	DESCRIPTION
1	SP15-FP-070	Power Post - Open End
1	SP15-PP-073	Power Post - Closed End
Exception: For 15,000lb 204 Flat Deck, use SP10-FP-073		
2	SP15-SP-070	Slave Post - Open End
3	SP15-PT-091	Standard Post - Open End
3	SP15-PT-091	Standard Post - Closed End
Exception: For 15,000lb 204 Flat Deck, use SP10-PT-091		
4	SP15-SR-450	Slave Runway - 204 Alignment
4	SP15-SR-451	Slave Runway - 240 Alignment
4	FT12-SR-100	Slave Runway - 204 Flat Deck
4	FT15-SR-100	Slave Runway - 240 Flat Deck
5	SP15-PR-450	Power Runway - 204 Alignment
5	SP15-PR-451	Power Runway - 240 Alignment
5	FT12-PR-100	Power Runway - 204 Flat Deck
5	FT15-PR-100	Power Runway - 240 Flat Deck
6	SP15-SC-230	Open End Front Crossmember - Slave
6	SP15-SC-230N	Open End Front Crossmember - Slave Narrow
6	SP15-PC-230	Open End Front Crossmember - Power
6	SP15-PC-230N	Open End Front Crossmember - Power Narrow
6	SP15-PC-200	Closed End Front Crossmember
6	SP15-PC-200	Closed End Front Crossmember - Narrow
Exception: For 15,000lb 204 Flat Deck, use SP12-PC-200 & SP12-PC-004		
7	SP15-RC-200	Rear Crossmember
7	SP15-RC-200N	Rear Crossmember - Narrow
Exception: For 15,000lb 204 Closed End, Flat Deck, use SP12-RC-200 & SP12-RC-005		

Common Parts to 12K and 15K Alignment Lift Models

ITEM	PART NUMBER	DESCRIPTION
8	SP10-PR-026	Slip Plate (Alignment Lift Only)
9	SP10-PR-025	Ball Retainer (Alignment Lift Only)
10	SP10-PR-010	Radius Plate Retainer Bar (Alignment Lift Only)
11	SP10-PR-045	Slip Plate Lock Pin (Alignment Lift Only)
12	NILN050Z	Hex Nut-Nylon Insert 1/2 - 13 (Alignment Lift Only)
13	SP10-PR-511	Slip Plate Washer (Alignment Lift Only)
14	HHG5050C0200	Hex Screw 1/2 - 13 x 2" (Alignment Lift Only)
15	FO-991112	Steel Balls 9/16" (Align. Only Qty. 54)
16	BL06250DENAKE	Plastic Balls 9/16" (Align. Only Qty. 174)

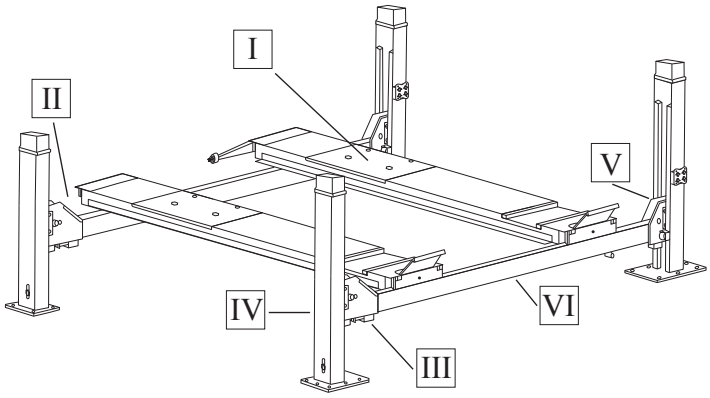

Common Parts to 12K and 15K Crossmember Lift Models

ITEM	PART NUMBER	DESCRIPTION
17	SP10-PC-005	Pulley Pin (Crossmember)
18	SP10-PC-056	Wear Strip (Crossmember)
19	SP10-PC-070	Wear Roller (Crossmember)

ALLPART SUPPLY, INC.
1-800-381-1330 - Fax 817-284-2935

© 2008 ALLPART SUPPLY, INC.

ACANUS LIFTS Hoist Parts Cont'd

COMMON PARTS FOR 12K AND 15K FOUR POST HOIST PARTS

Common Parts to 12K and 15K Runway Lift Models

ITEM	PART NUMBER	DESCRIPTION
20	AC-SP10-PR-472	Pulley Pin (Runway)

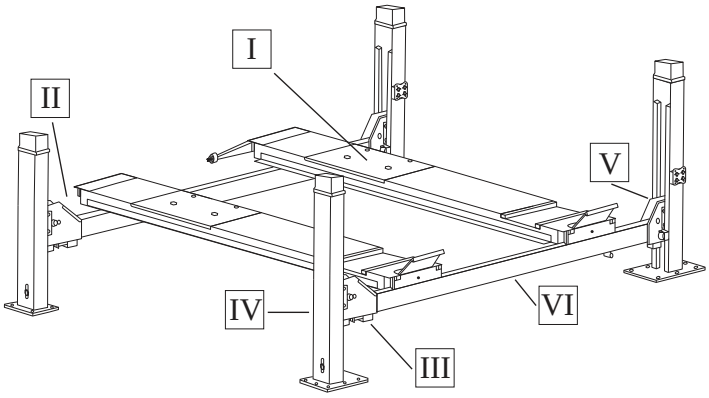

Optional Parts to 12K and 15K Lift Models

ITEM	PART NUMBER	DESCRIPTION
21	SP10-RC-218	Pulley Cover (Optional)
22	SP10-FP-085	Post Cap (Optional)
23	SP12-PR-620	Work Step - Right Hand (Optional)
24	SP12-PR-600	Work Step - Left Hand (Optional)
25	SP10-PR-003	Wheel Stops - Flip Down (Optional)

Common Parts to all 12K and 15K Lift Models

ITEM	PART NUMBER	DESCRIPTION
26	SP12-PR-300	Approach Ramp (Drive On Ramp)
27	SP10-FP-091	Safety Ladder
28	WA075X0550	Wedge Anchor (C/W Washer and Nut)
29	SP12-PR-037	Main Hydraulic Cylinder
30	SP12-CB-012	Trunnion (Cable Puller)
31	SP12-CB-013	Trunnion Ring
32	SP10-FP-100	Ladder Spacer (Not Required on All Models)
33	SP10-PC-055	Safety Shoe (Air Release Safety)
34	SP12-PR-023	Ramp Pin
35	SP12-PR-400	Front Wheel Stop
36	See Lift Cables Page	Lift Cables
37	SP10-PC-048	Air Cylinder (Air Release Safety)
38	SP10-PC-053	Compression Spring (Air Release Safety)
39	SP10-PC-042	Extention Spring (Cable Failure Safety)
40	SP12-PC-002	Cable Roller (Cable Failure Safety)
41	HHG8037C0100	Hex Screw 3/8-16 x 1" GR. 8
42	SSB037X0100	Shoulder Bolt 3/8 x 1"
43	WL031Z	Lock Washer 5/16"
44	SP12-PR-535	Cable Retainer Screw (Special) 5/16 - 18 x 6 1/2
45	HHG8031C0100	Hex Screw 5/16 - 18 x 1" Gr. 8
46	NH031CZ	Hex Nut 5/16 - 18
47	WL037Z	Lock Washer 3/8"
48	PCOR121000	Cotter Pin 1/8 x 1 1/2"
49	WF087Z	Flat Washer 7/8"
50	NHG8087CZ	Hex Nut 7/8 - 9 Gr. 8
51	WF037Z	Flat Washer 3/8"

Common Parts Continued

ITEM	PART NUMBER	DESCRIPTION
52	HHG8037C0075	Hex Screw 3/8 - 16 x 3/4" Gr. 8
53	NHG8062CZ	Hex Nut 5/8 - 11 Gr. 8
54	WF025Z	Flat Washer 1/4"
55	HHG80250075	Hex Screw 1/4 - 20 x 3/4" Gr. 8
56	HHG5050C0100	Hex Screw 1/2 - 13 x 1"
57	WL050Z	Lock Washer 1/2"
58	SSS050C0100	Set Screw-Cup Point 1/2 - 13 x 1"
59	SSS050C0075	Set Screw-Cup Point 1/2 - 13 x 3/4"
60	SSB037X0075	Shoulder Bolt 3/8 x 3/4"
61	SSB037X0125	Stripper Screw 3/8 x 1 1/4"
62	NH025FZ	Hex Nut 1/4 - 28
63	WF075Z	Flat Washer 3/4"
64	SP12-PR-537	Rubber Wheel 1" x 2" Dia.
65	NHG8100F	Hex Nut 1 - 14 Gr. 8
66	NHJ062FZ	Hex Jam Nut 5/8 - 18
67	WLI062	Lock Washer - Internal Tooth 5/8"
68	USH-50V	Levelling Shims (Set of Various Sizes)
69	SP10-PC-017	Pulley Assembly
70	SP10-PC-020	Pulley Spacer 1"
71	SP10-PC-460	Pulley Spacer 3"
72	SP10-PR-018	Pulley Spacer 1 1/2"
73	SP10-PR-019	Pulley Spacer 2 5/8"
74	SP10-PC-022	1/8" Spacer Washer
75	SP10-PC-214	Thrust Washer - Nylon
76	AC-SP10-PC-236	Bearing

ALLPART SUPPLY, INC.
1-800-381-1330 - Fax 817-284-2935

© 2008 ALLPART SUPPLY, INC.

ACANUS LIFTS

HYDRAULIC AND AIR KIT - FOUR POST LIFT

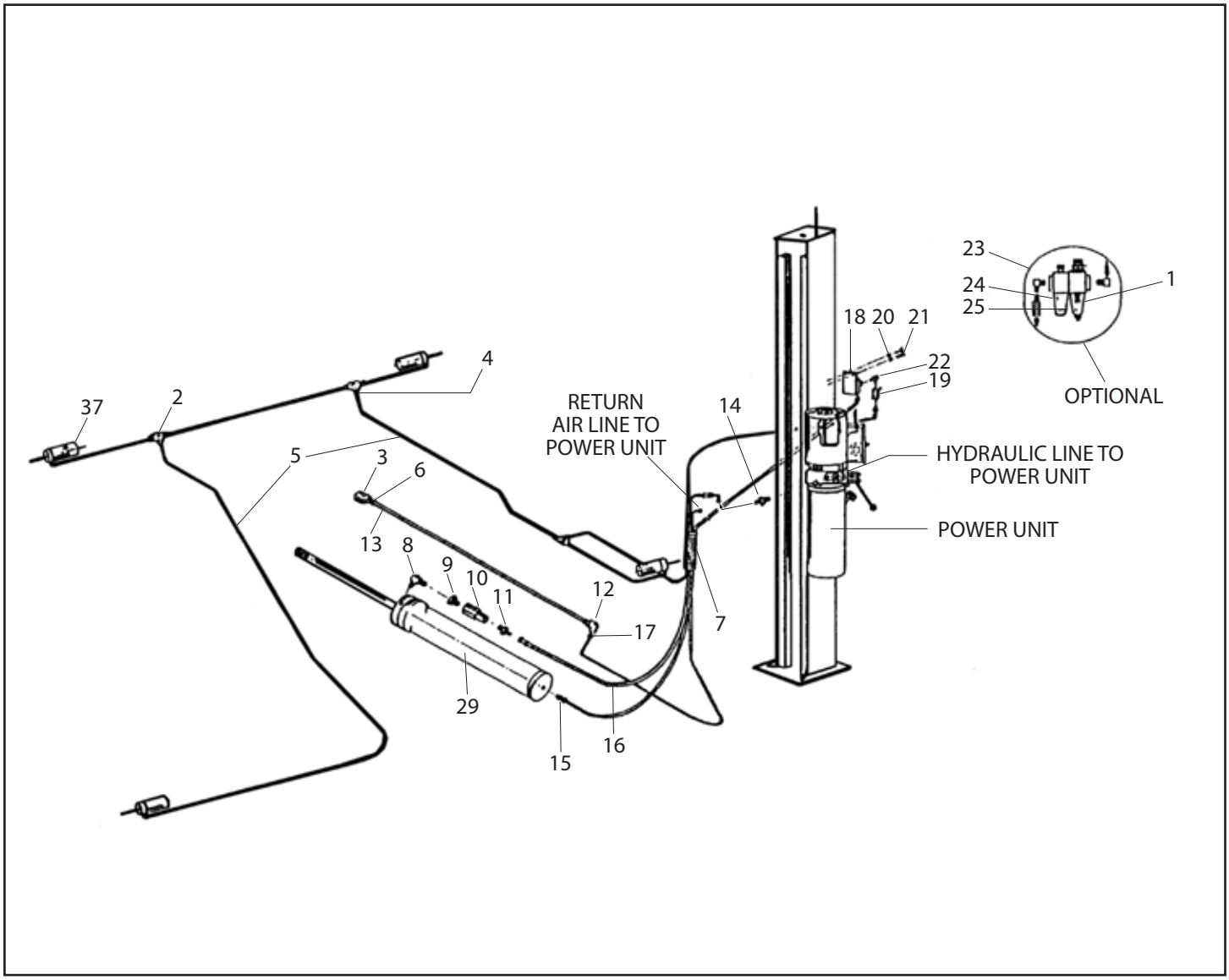

ALLPART SUPPLY, INC.
1-800-381-1330 - Fax 817-284-2935

© 2008 ALLPART SUPPLY, INC.

ACANUS LIFTS

Hydraulic and Air Kit - Four Post Lift Parts List

(168-204, Standard - Narrow, Open End)

ITEM	PART NUMBER	DESCRIPTION
1	P3AEA92BEBNNP	Filter
2		1/4” Tee (Poly Tube)
3		1/4” NPT 90 Deg. Elbow
4		1/8” NPT to 1/4” 90 Deg. Elbow
5		1/4” Diameter Poly Tube
6		1/4” NPT Male to 3/8” Poly Tube
7		Hose Guard
8		1/4” NPT 90 Deg. Elbow Male
9		3/8 NPT Male to 1/4” NPT Female
10		Flow Control - 2.56 PM
11		3/8” NPT Male to 1/4” JIC Male
12		1/4 NPT Female Tee
13		3/8 Diameter Poly Tube
14		9/16” - 18 Male to 1/4” JIC Male Connector
15		1/8” NPT Male 1/4” Poly Tube
16	SP10-PP-040	Hydraulic Line (Rubber 162” Long)
17		1/4” NPT Male to 3/8” Poly Tube
18		1/4” Female Tee C/W Bracket
19	SP10-PP-024	Air Valve
20	WL025Z	1/4” I.D. Lock Washer
21	HHG5025C0050	1/4” X 1/2” - 20 Unc. Hex. Hd. Bolt
22		1/4” NPT to 1/8” NPT 90 Deg. Elbow
23	AC-SP10-PP-442	Lub./Filter Combination Kit
24	P3ALA92AANP	Lubricator
25	P3AKA00MRN	Mounting Bracket
29	SP12-PR-037	Main Cylinder - 3.5”
37	SP10-PC-048	Air Cylinder

ALLPART SUPPLY, INC.
1-800-381-1330 - Fax 817-284-2935

© 2008 ALLPART SUPPLY, INC.

ACANUS LIFTS

SP12-AS-6000 (JACK BEAM) PARTS ILLUSTRATION

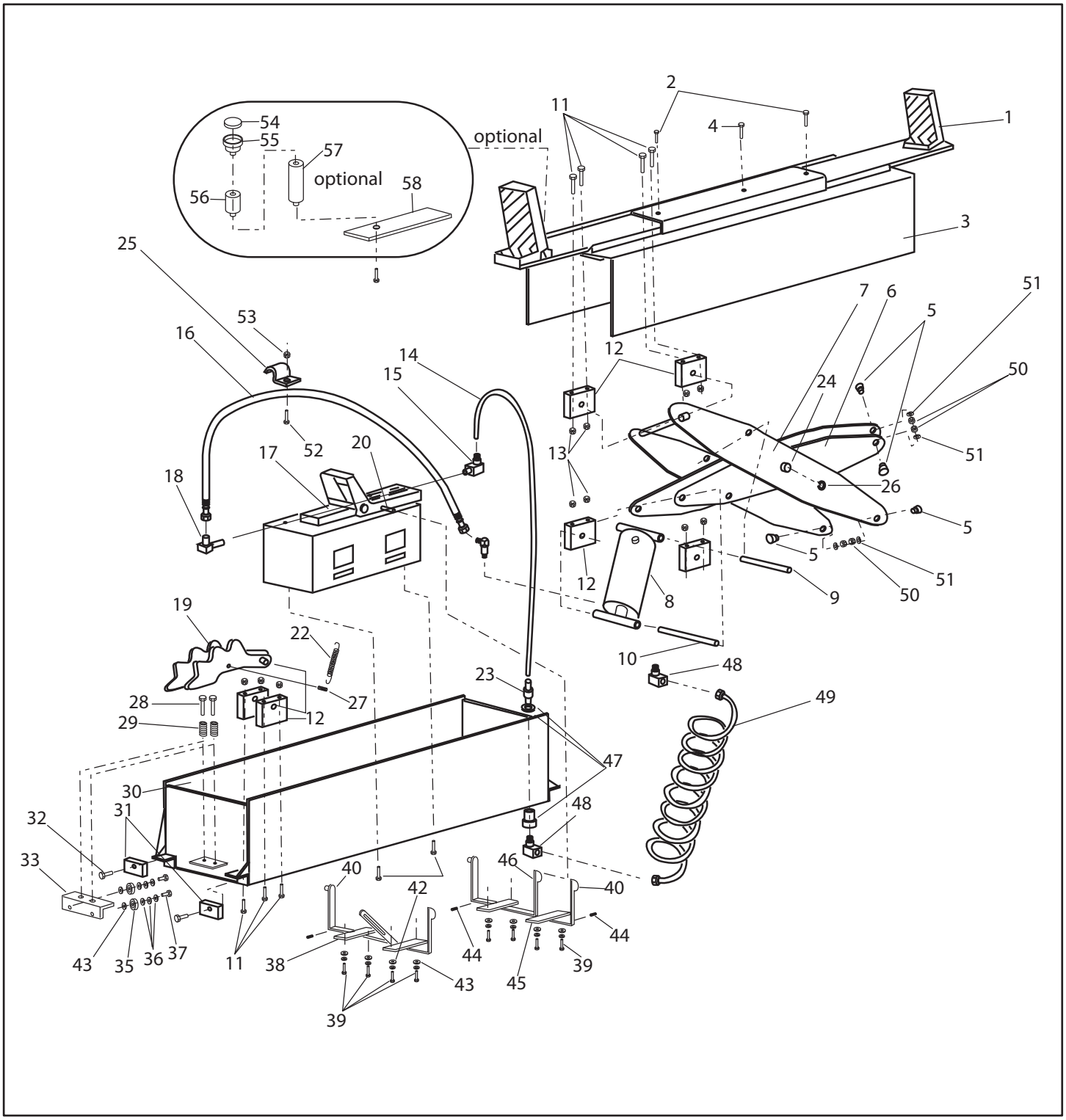

ALLPART SUPPLY, INC.
1-800-381-1330 - Fax 817-284-2935

© 2008 ALLPART SUPPLY, INC.

ACANUS LIFTS

SP12-AS-6000 (JACK BEAM) PARTS LIST

ITEM	PART NUMBER	DESCRIPTION
1	SP10-JB-100	Jack Pad Assembly
2	HHG5025C0050	1/4” x 1/2 - 20 Unc. Hex. Bolt
3	SP10-JB-200	Jack Box Top Assembly
4	HHG5025C0062	1/4” x 5/8” - 20 Unc. Hex. Bolt
5	CF1-1/2	Cam Follower Bearing, CF - 1 1/2” Dia.
6	SP10-JB-300	Scissor - Inner Assembly
7	SP10-JB-400	Scissor - Outer Assembly
8	SP12-JB-001	Hydraulic Cylinder
9	SP12-JB-002	Upper Cylinder Shaft
10	SP12-JB-003	Lower Cylinder Shaft
11	HHG5031C0275	5/16” x 2 3/4” - 18 Unc. Hex. Hd. Bolt
12	SP10-JB-008	Pillow Block
13	NILN031CZ	5/16” - 18 Unc. Hex. Lock Nut
14	SP10-JB-010	Pump Air Hose 9” Longmember
15		Hose To Pump Elbow Fitting
16	SP10-JB-012	Hydraulic Hose
17	SPX-58356	OTC Pump
18		1/4” NPT Male to 1/4” JIC Male 90 Deg. Elb.
19	SP10-JB-016	Safety
20	SSB037X0125	3/8” x 1 1/4 Shoulder Screw
21		3/8” NPT Male to 1/4” JIC 90 Deg. Elbow
22	SP10-JB-018	Tension Spring
23	SP10-JB-021	1/4” NPT Male to 5/16” I.D. Air
24	SP10-JB-023	Centre Shaft
26	E-100	Retaining Ring E-Clip 1”
27	SSB037X0125	Safety Shoulder Screw
28	HHG5031C0225	5/16” x 2 1/4” - 18 UNC. Hex. Hd. Bolt
29	07MH15	Wheel Mount Spring
30	SP10-JB-500	Jack Box Bottom Assembly
31	SP10-JB-008	Pillow Block

ITEM	PART NUMBER	DESCRIPTION
32	MSFP025C0025Z	1/4” x 1/4” - 20 UNC. Flat Hd. Screw
33	SP10-JB-600	Wheel Brack Assembly
35	SP10-JB-029	Wheel Bearing
36	WF037Z	3/8” I.D. x 1” O.D. Flat Washer
37	SSB037X0075	3/8” x 3/4” Shoulder Screw
38	SP10-JB-700	Safety Handle Shaft Assembly
39	HHG5025C062	1/4” x 5/8” - 20 Unc. Hex. Hd. Bolt
40	SP10-JB-031	Handle
41	TCSFHH025C075	1/4” x 3/4” - 20 Unc. Hd. Self Tapping
42	WL025Z	1/4” I.D. Lock Washer
43	WF025Z	1/4” I.D. Flat Washer
44	PRO0125X100	1/8” x 1” Roll Pin
45	SP10-JB-036	Handle Mount Bracket
46	SP10-JB-800	Pump Handle Shaft Assembly
47		Bulkhead Fitting
48		1/4” Npt Male to 1/4” Npt Female, 90 Degree
49	SP10-JB-039	Self Storing Air Hose
49	SP12-JB-028	Steel Braid Air Hose - (Muffler)
50	NH062FZ	5/8” - 18 Unf. Hex. Nut
51	WL062Z	5/8” I.D. Lock Washer
52	HHG5025C0075	1/4” x 3/4” - 20 Unc. Hex. Bolt
53	NH025CZ	1/4” - 20 Unc. Hex. Nut
54	SP12-JB-016	Lift Pad Insert (Rubber)
55	SP12-JB-015	Lift Pad - Stackable
56	SP12-JB-014	Lift Pad Extension - 3” Stackable
57	SP12-JB-025	Lift Pad Extension - 10" (Option)
58	SP12-JB-021	Lifting Arm - Drilled

ALLPART SUPPLY, INC.
1-800-381-1330 - Fax 817-284-2935

© 2008 ALLPART SUPPLY, INC.

ACANUS LIFTS

SP12-PJ-6000 PARTS ILLUSTRATION

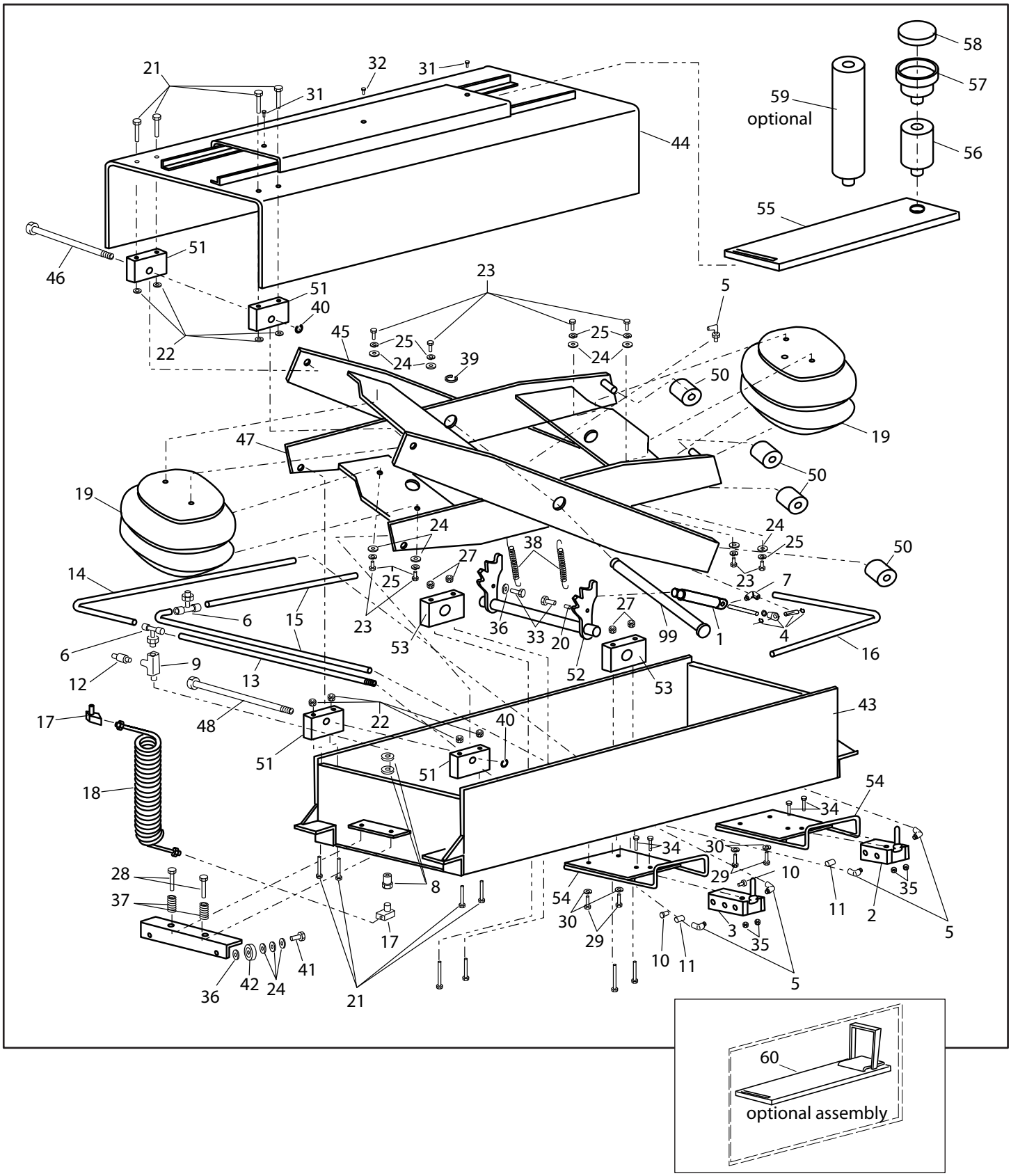

ALLPART SUPPLY, INC.
1-800-381-1330 - Fax 817-284-2935

© 2008 ALLPART SUPPLY, INC.

ACANUS LIFTS

SP12-PJ-6000 PARTS LIST

ITEM	PART NUMBER	DESCRIPTION
1	SR-04-2-RP	Air Cylinder
2	SCH524311000	Air Valve - 3 Way
3	SCH521811000	Air Valve - 4 Way
4	AC-D-166-3	Clevis Mount Assembly
5		Fitting-1/4NPT(M)-1/4 Tube 90 Deg. Elbow
6		Fitting-1/4NPT(M)-1/4NPT Tube T
7		Fitting-1/SNPT(M)-1/4 Tube 90 Deg. Elbow
8		Bulkhead Fitting
9		Fitting-1/4NPT Street "T"
10		Fitting-1/4NPT(M) Plastic Plug
11		Fitting-1/4NPT(M) Vent
12		Fitting- 1/4NPT(M) Relief Valve-120 Psi
13		Nylon Tube-1/4"O.D. X 21" Long(White)
14		Nylon Tube-1/4"Ocr X 34" Long(Black)
15		Nylon Tube-1/4"O.D. X 16" Long(Blue)
16		Nylon Tube-1/4"O.D. X 18" Long(Yellow)
17		Fitting-1/4NPT(M)-1/4NPT(F) 9O deg. Elbow
18		Self Storing Hose X 25"
19		Air Bag Actuator
20	NH025CZ	Hex Nut 1/4"-20
21	HHG8037C0300	Hex Screw 3/8"-16 X 3" Gr.8
22	NILN037CZ	Nylon Insert Hex Nut 3/8"-16
23	HHG8037C0125	Hex Screw 3/8"-18 X 1 1/4" Gr.8
24	WF037Z	Flat Washer 3/8" I.D.
25	WL037Z	Lock Washer 3/8" I.D.
26	HHG8031C0325	Hex Screw 5/16"-18 X 3 1/4" Gr.8
27	NILN031CZ	Nylon Insert Hex Nut 5/16"-18
28	HHG8031C0225	Hex Screw 5/16"-18 X 2 1/4" Gr.8
29	HHG8031C0075	Hex Screw 5/16"-18 X 3/4" Gr.5
30	WL031Z	Lock Washer 5/16" I.D.

ITEM	PART NUMBER	DESCRIPTION
31	HHG8025C0050	Hex Screw 1/4"-20 X 1/2" Gr.8
32	HHG8025C0062	Hex Screw 1/4"-20 X 5/8" Gr.8
33	HHG8025C0150	Hex Screw 1/4"-20 X 1 1/2" Gr.8
34	MSPP010C0150Z	Machine Screw #10-24 X 1 1/2"
35	NILN010CZ	Nylon Insert Hex Nut #10-24
36	WF025Z	Flat Washer 1/4" I.D.
37	07MH15	Die Spring 3/4" X 1 1/2" Code Red
38	AC-SP10JB018	Tension Spring-Safety
39	E-100	C-Clip 1" I.D. E-Type
40	E-075	C-Clip 3/4" I.D. E-Type
41	SSB037X0050	Shoulder Bolt 3/8" X 1/2"
42	AC-SP10JB029	Wheel Bearing
43	AC-PJ06BT013	Jack Box Bottom
44	AC-PJ06TP007	Jack Box Top
45	AC-PJ06SC005	Outer Scissor Section
46	AC-PJ06SC013	Outer Scissor Shaft
47	AC-PJ06SC007	Inner Scissor Section
48	AC-PJ06SC014	Inner Scissor Shaft
49	AC-PJ06SC012	Center Scissor Shaft
50	AC-PJ06SC011	Scissor Roller Assembly
51	AC-PJ06SC015	Scissor Pillow Block
52	AC-PJ06BT053	Safety Assembly
53	AC-PJ06BT055	Safety Pillow Block
54	AC-PJ06BT016	Valve Mount Bracket
55	AC-SP12JB021	Sliding Jack Arm
56	AC-SP12JB014	Lift Pad Extension-3"
57	AC-SP12JB015	Lift Pad
58	AC-SP12JB016	Lift Pad Insert(Rubber Puck)
59	AC-SP12JB025	Lift Pad Extension-10"(Optional)
60	AC-SP12JB100	Jack Arm-Swivelling Lift Pad(Optional)

ALLPART SUPPLY, INC.
1-800-381-1330 - Fax 817-284-2935

© 2008 ALLPART SUPPLY, INC.

ACANUS LIFTS

SP15-HJ-8000 PARTS ILLUSTRATION

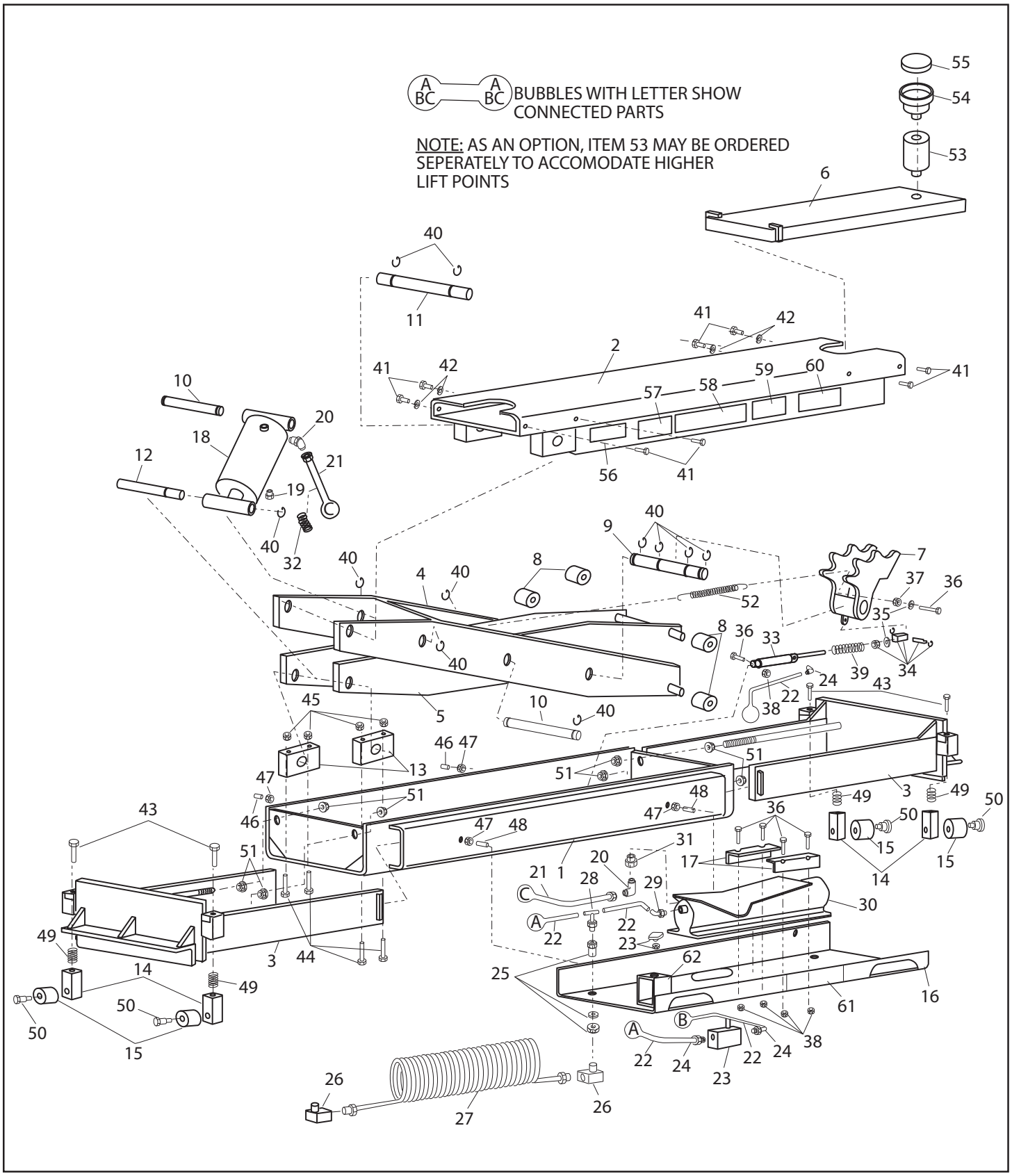

ALLPART SUPPLY, INC.
1-800-381-1330 - Fax 817-284-2935

© 2008 ALLPART SUPPLY, INC.

ACANUS LIFTS

SP15-HJ-8000 PARTS LIST

ITEM	PART NUMBER	DESCRIPTION
1	AC-SP08HJ050	Jack Bottom
2	AC-SP08HJ040	Jack Top
3	AC-SP08HJ060	Jack Slider
4	AC-SP08HJ020	Outer Scissor
5	AC-SP08HJ010	Inner Scissor
6	AC-SP08HJ045	Lifting Arm
7	AC-SP08HJ030	Safety Ratchet
8	AC-PJ06SC011	Scissor Roller
9	AC-SP08HJ017	Safety Pivot Shaft
10	AC-SP08HJ016	Upper Cyl. & Center Shaft
11	AC-SP08HJ015	Upper Scissor Shaft
12	AC-SP08HJ005	Lower Cyl. Shaft
13	AC-SP08HJ014	Pillow Block
14	AC-SP08HJ065	Spring Block
15	AC-SP08HJ066	Jack Wheel
16	AC-SP08HJ700	Operation Tray
17	AC-SP08HJ708	Pump Clamp
18	AC-SP08HJ106	Hydraulic Jack Cylinder
19		(If Required) Fitting-1/8NPT(M) Breather
20		Fitting-1/4NPT(M) X 1/4 JIC (M) 90 Deg. Elbow
21		Hydraulic Hose 24"Long
22		Nylon Tube 1/4"Dia. 34"Long
23		Safety Valve Assembly
24		Fitting-1/8N Pt(M) X 1/4Tube 90 Deg. Elbow
25		Fitting-1/4NPT(F) Bulkhead Assembly
26		Fitting-1/4NPT(M) X 1/4NPT(F) 90 Deg. Elbow
27		Self Storing Hose
28		Fitting-1/4NPT(M) X 1/4Tubet
29		Fitting-1/4NPT(M) X 1/4Tube 90 Deg. Elbow
30	AC-SP08HJ100	Air/Hydraulic Jack Pump
31		Fitting-3/8NPT(M) X 1/4(NPT(F) Bushing

ITEM	PART NUMBER	DESCRIPTION
32	AC-SP08HJ113	Hydraulic Hose Guard
33	SR-04-2-RP	Safety Air Cylinder
34	AC-D-166-3	Air Cyl. Clevis Mount Kit
35	WF025Z	Flat Washer 1/4" I.D.
36	HHG8025C0150	Hex Screw 1/4-20 X 1 1/2"
37	NH025CZ	Hex Nut 1/4-20
38	NILN025CZ	Hex Nut 1/4-20 Nylon Insert
39	AC-SP08HJ110	Compression Spring-Safety Air Cyl.
40	E-100	1" I.D. E-Type C-Clip
41	HHG8037C0100	Hex Screw 3/8-16 X 1"
42	WL037Z	Split Lock Washer 3/8" I.D.
43	HHG8037C0125	Hex Screw 3/8-16 X 1 1/4"
44	HHG8037C0300	Hex Screw 3/8-16 X 3"
45	NILN037CZ	Hex Nut 3/8-16 Nylon Insert
46	SSS037C0100	Set Screw 3/8-16 X 1"
47	NH037CZ	Hex Nut 3/8-16
48	SSS037C0150	Set Screw 3/8-16 X 1 1/2"
49	AC-SP08HJ107	Die Spring (Blue) 3/4" Dia. X 1"
50	SSB050X0100	Shoulder Bolt 1/2" X 1"
51	NHSFLN050CZ	Whiz Lock Nut 1/2-13
52	AC-SP10JB018	Extension Spring-Safety Ratchet
53	AC-SP12JB014	Lift Pad Extension 3"
54	AC-SP12JB015	Lift Pad
55	AC-SP12JB016	Lift Pad Insert
56		Decal-Maximum Air: Warning
57		Decal-Roll Jack....Forward: Caution
58		Decal-Do Not Lift: Warning
59		Decal-Maximum Jack Load: Caution
60		Decal-Keep Hands Off: Warning
61		Decal-Raise Lower
62		Decal-Push Button To

ALLPART SUPPLY, INC.
1-800-381-1330 - Fax 817-284-2935

© 2008 ALLPART SUPPLY, INC.