Post-it® Fax Note 7671	Date 10/14/6 S	# of pages ▶ 2
To JOHN MILCHER	From DAVID HARPER	
Co./Dept.	Co.	
Phone #	Phone #	
Fax #	Fax #	

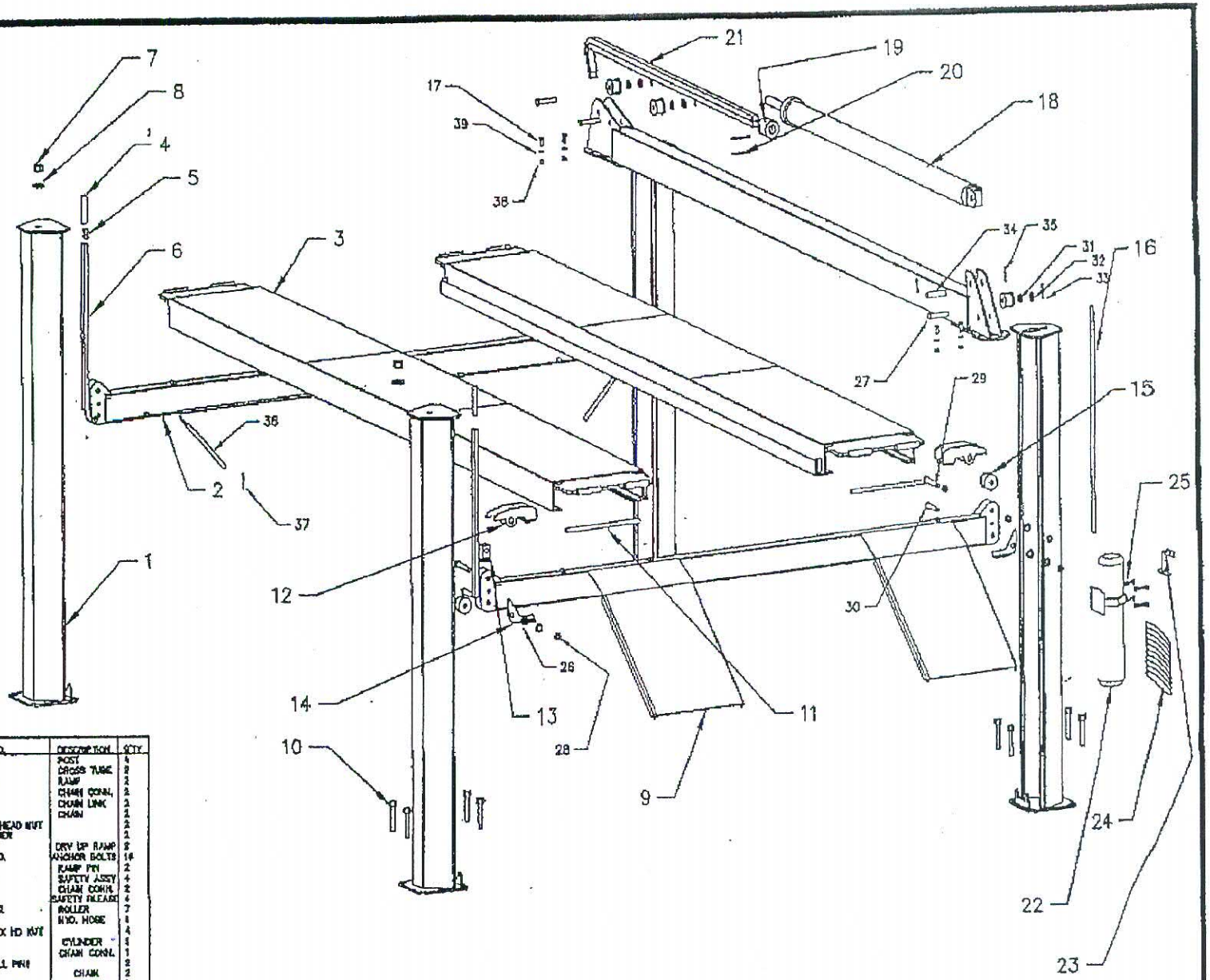

ITEM NO.	PART NO.	DESCRIPTION	QTY.
-1	8801-B	POST	4
-2	8821	CROSS TUBE	2
-3	8807-4	RAMP	2
-4	8818	CHAIN CONN.	2
-5	#513	CHAIN LINK	2
-6	#512	CHAIN	2
-7	1-14 UNF HEX HEAD NUT		2
-8	1" WASHER		2
-9	8858-D	DRY UP RAMP	2
-10	PART NO.	ANCHOR BOLTS	14
-11	8883	RAMP PIN	2
-12	8819-A	SAFETY ASSY	4
-13	8815	CHAIN CONN.	2
-14	8843	SAFETY RELEASE	4
-15	WH27-2	ROLLER	7
-16	#200	HYD. HOSE	1
-17	3/8-16 UNC HEX HD NUT		4
-18	#204	CYLINDER	1
-19	8834	CHAIN CONN.	1
-20	3/8x4 DOWELL PIN		2
-21	#544	CHAIN	2
-22	221 14 222 34	POWER UNIT	1
-23	#574	AIR VALVE	1
-24	#582	AIR LINE	1
-25	3/8-16 BOLT-WSHR-NUT		4
-26		3/4 WASHER	12
-27	3/4" CLEVIS PIN		1
-28	3/4-16 NYLOC NUT		6
-29	3/4-16x6" UNC HX HD BLT		4
-30	3/4-16x4 1/2 UNC HX HD BLT		4
-31	3/4 WASHER		12
-32	3/8 LOCK WASHER		4
-33	HAIR PIN		3
-34	DOWELL PIN	CYLINDER	1
-35	HAIR PIN	CYLINDER	2
-36	S110	AIR SFETY CYL.	4
-37	HAIR PIN		4
-38	3/8-16 NUTS		4

NOTES: UNLESS OTHERWISE SPECIFIED

BREAK ALL SHARP CORNERS APPROX .015"

PROJECTION

APPROVED

CAGE CODE ØA223

TOLERANCES: XX ± 0.02 XXX ± 0.005 FRACTIONS ± 1/16 SURFACE 63 ANGLES ± 1/2°

QTY REQ'D

NEXT ASSY

BEND-PAK 1645 LEMONWOOD DRIVE SANTA PAULA, CA 93060

BP 12X

MAT'L:

DATE: 7/16/97 REV.

SCALE: 3D113