1250 2D/3D/3DV
1255 3D/3DV
Wheel Balancers

Parts Identification

READ these instructions before placing unit in service KEEP these and other materials delivered with the unit in a binder near the machine for ease of reference by supervisors and operators.

HENNESSY INDUSTRIES, INC.

1601 J. P. Hennessy Drive, LaVergne, TN USA 37086-3565 615/641-7533 800/688-6359

HENNESSY INDUSTRIES INC. Manufacturer of AMMCO®, COATS® and BADA® Automotive Service Equipment and Tools.

Manual Part No.: 8114308 21

Revision: 6/13

Parts Identification

The following pages include parts breakdowns with exploded view illustrations to help with ordering replacement or spare kits. Assemblies are noted where it is recommended that individual parts not be ordered separately. Every effort is made to supply accurate exploded views, however, due to interim changes in manufacturing operations, some units may not be exactly as illustrated.

Table of Contents

Wheel Guard Assembly 3

Chassis Assembly 4

Distance Gauge Assembly 5

Motor Assemblies . . . . . .6 - 7

Pod & Touch Panel Assemblies . . . . . .8 - 9

Power Panel & MCB . . . . . .10 - 11

Wheel Guard Assembly

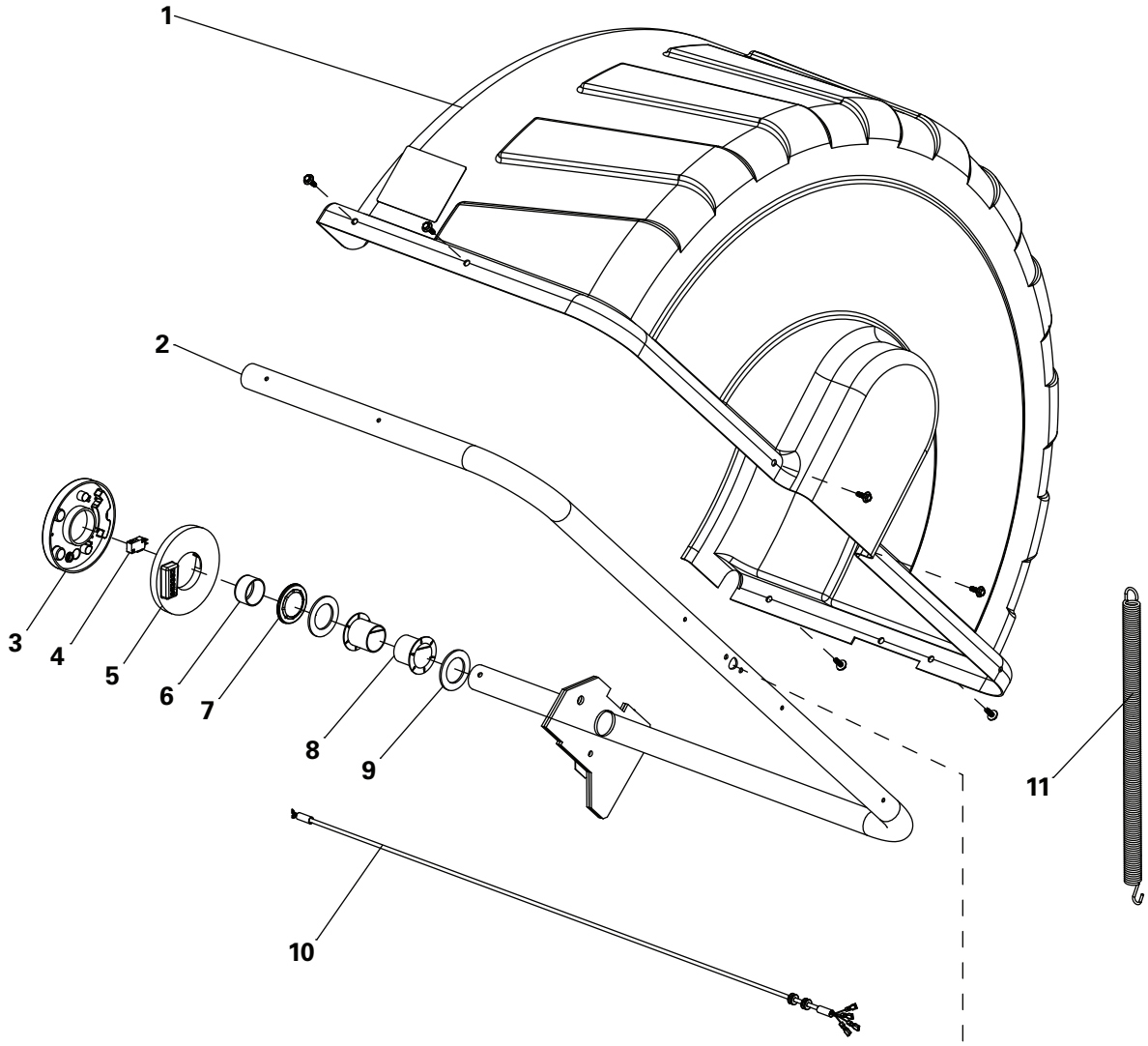

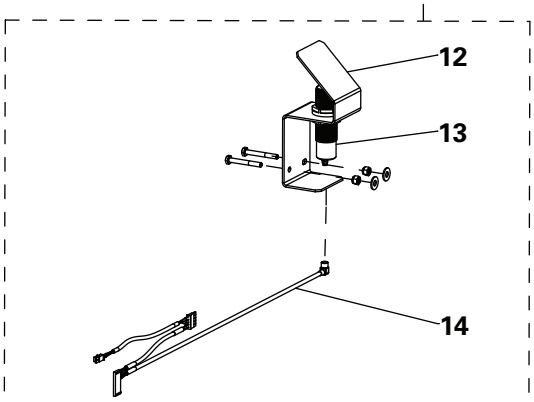

(Sonar Assembly - If Equipped)

ITEM	PART NO.	DESCRIPTION
1	8113620	Wheel Guard
2	8114319	Hood Bar W/C
3	8113333	Hood Switch Housing
4	8113334	Limit Switch
5	8113332	Hood Switch Cam/Cover
6	8109949	Hood Bar Cap
7	8109945	1-1/2" Retainer Washer
8	8307014	Flanged Nylon Bearing
9	8109944	Hood Bar Washer
10	8114262	Hood Switch Cable Assembly
11	8308062	Hood Spring
12	85000303	Sonar Bracket
13	85000304	Sonar Module
14	85000305	Sonar Cable Assembly

Chassis Assembly

ITEM	PART NO.	DESCRIPTION
1	8106304	1/4-20 Tinnerman Nut
2	8110560	#8-32x3/4 Screw
3	8111034	Weight Tray Assembly
4	8106301	1/4" Hex Self-Tap Screw
5	8111064	Weight Tray Shield
6	8108727	Threaded Rod
7	8106303	3/8-16 Hex Jam Nut
8	8114266	Piezo Assembly
10	8111029	Rear Harness Cover
11	8113333	Hood Switch Housing
12	8113332	Hood Switch Cam/Cover
13	8113334	Limit Switch
14	8301120	1/2-13x2-1/2 HH Bolt
15	8301121	1/2 Flat Washer
16	8309008	Rubber Hood Stop
17	8301122	1/2-13 Hex Nut
18	85606581	Flex Grommet

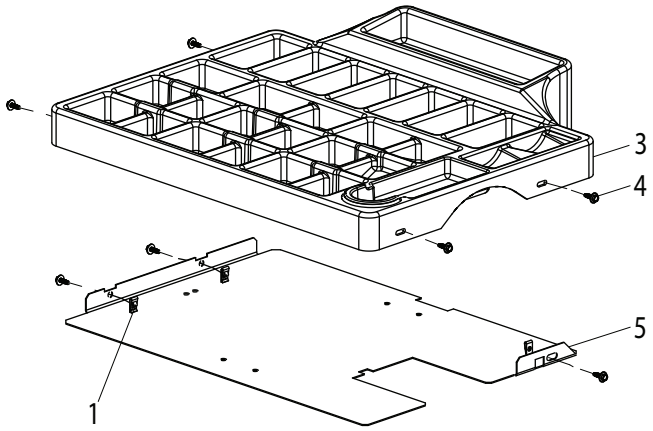

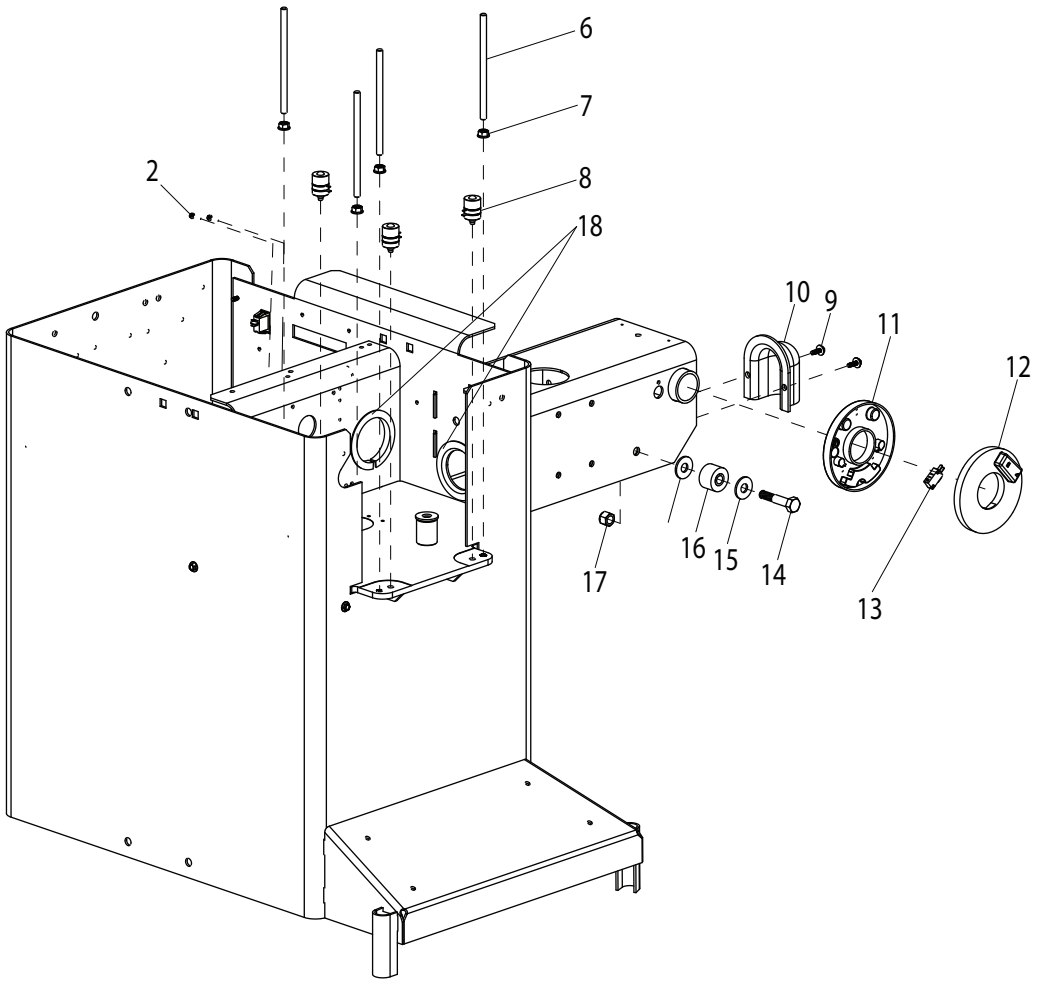

Distance Gauge Assembly

ITEM	PART NO.	DESCRIPTION
1	8114254	A & D Pendulum
2	8114251	A & D Bracket
3	8114257	A & D Pots with Harness Assy
4	85000730	Distance Rod Bushing
5	80180018	A & D Rod
6	8114258	A & D Pot Bracket
7	8301084	#8-32 Kep Nut
8	8114327	Distance Pot Pulley
9	80180022	String
10	8114403	Pulley Collar
11	8112317	10-32 Keps Nut
12	80180020	Spring Bracket, 3MM Screw
13	80180021	Washer 3MM
14	80180019	String Bracket
15	80180023	Spring
16	8114253	Cone
17	85009229	Line Laser
19	8111173	1/4-20 x 1-1/2 FHS Screw
20	8114380	Compression Spring
21	8114379	SHC 1/4-20 x 1-1/4 lg.Screw
22	8114264	Hose Clamlp
23	8114255	A & D Tube
24	85000731	Hex HD Cap Screw
25	8111032	1/4 Fender Washer
26	8114373	Arm
27	903174	Retaining Ring
28	8301534	1/4-20 x 7/8 HHC Screw
29	8143169	1/4-20 Whiz Lock Hex Nut
30	8111542	#8-32 X 5/8" SEM Screw
31	8100964	1 1/4-inch Retaining Ring
32	85000732	A&D Arm Tube Assembly Kit

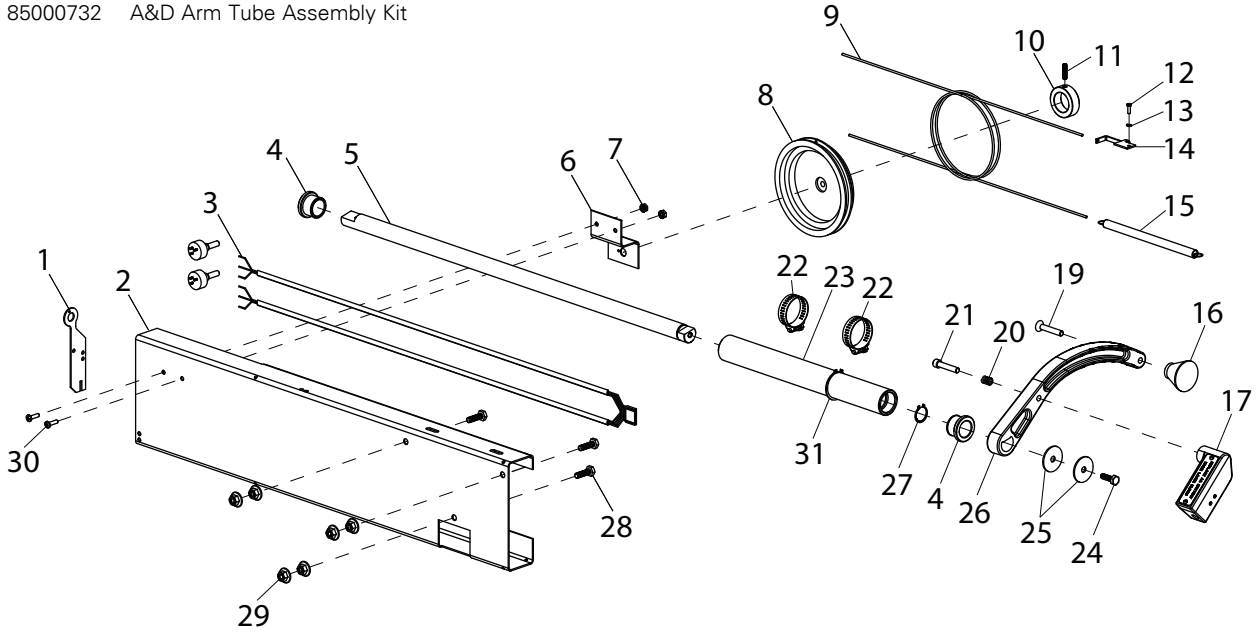

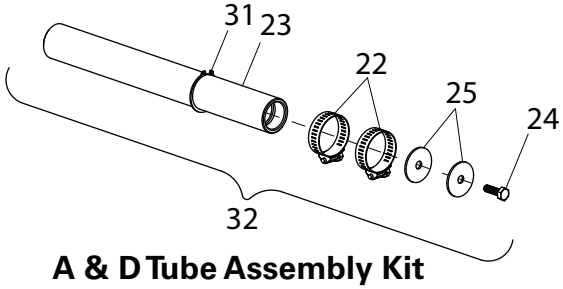

A & D Tube Assembly Kit

Motor Assemblies

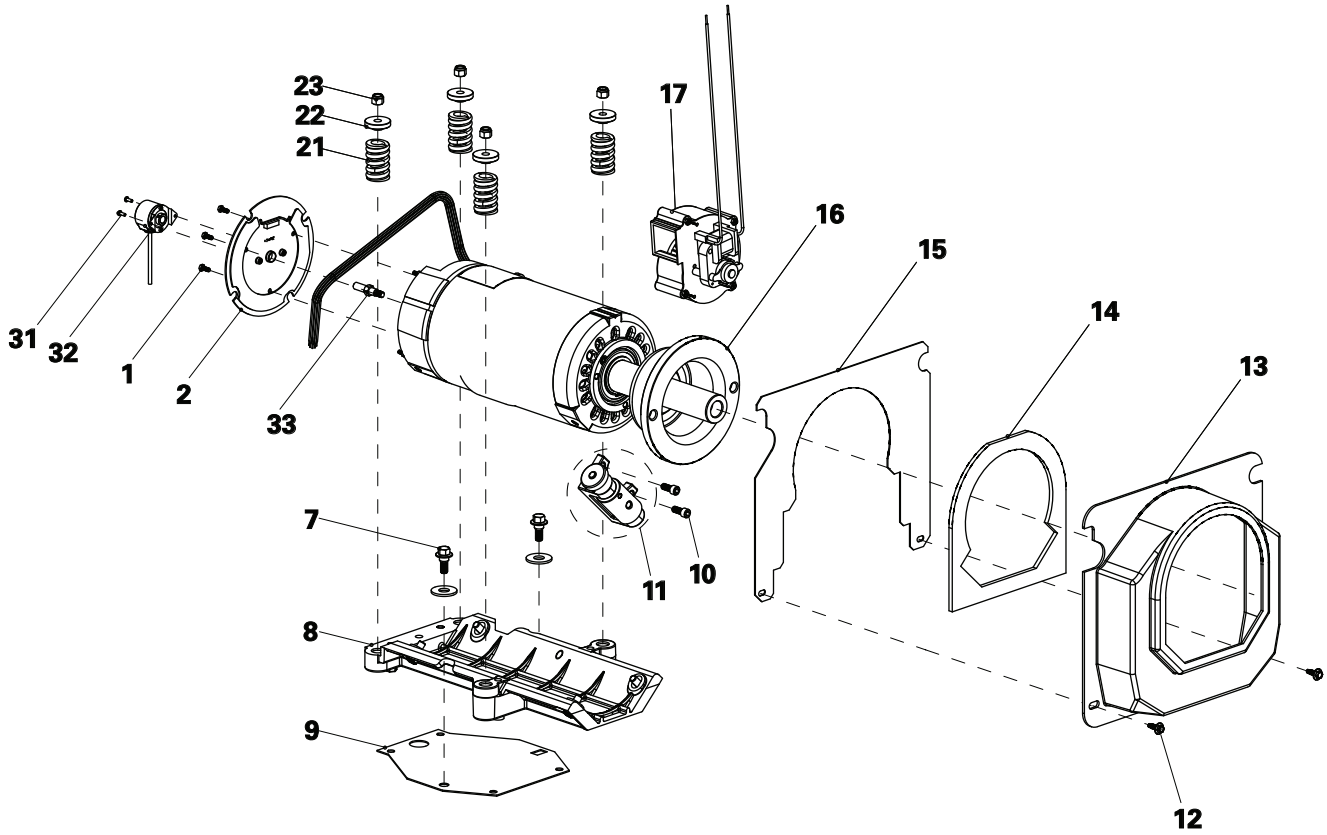

Motor Assembly - 40mm

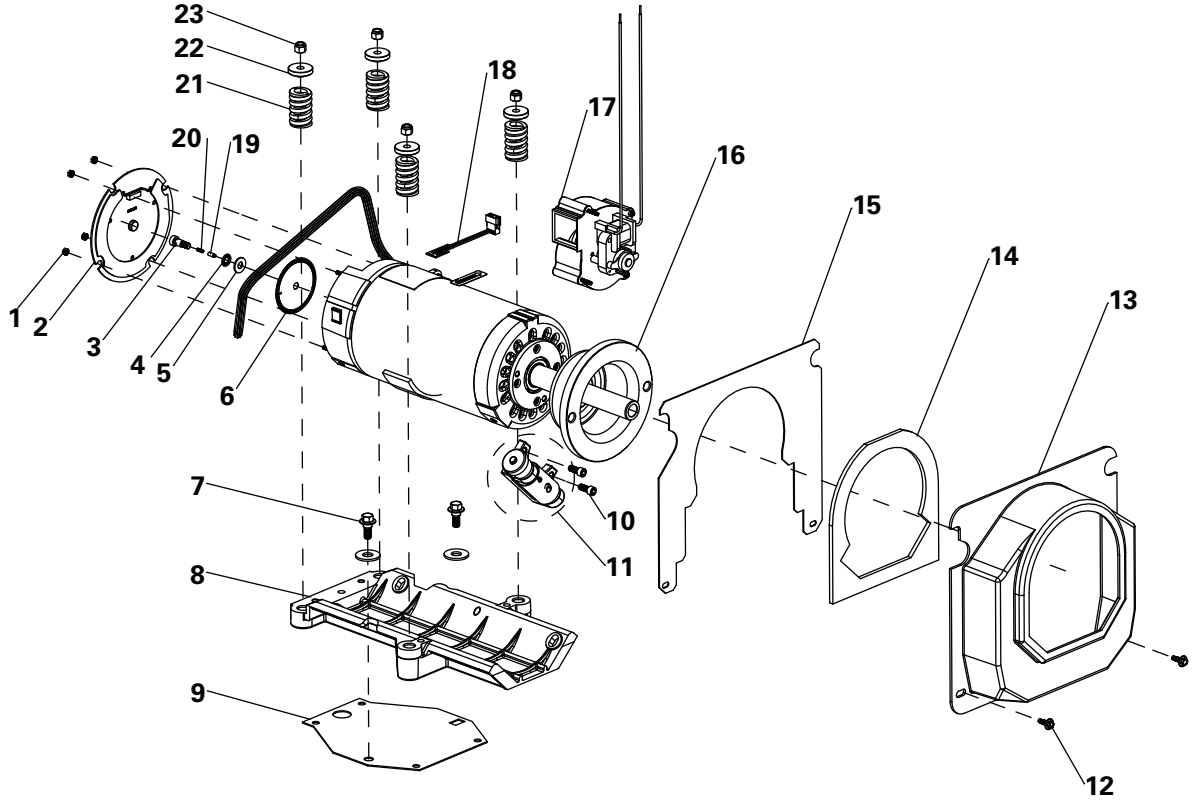

Motor Assembly - 28mm

(Motor Assembly)

ITEM	PART NO.	DESCRIPTION
1	8112191	10-24 x .50 HHMS Screw
2	8308513	Rear End Bell Cover (28mm)
	85009970	Rear End Bell Cover (40mm)
3	8113559	Brush Holder
4	8104200	3/8 Lock, Internal Tooth Washer
5	8107635	5/16 Plain Washer
6	8308817	Rotary Shutter
7	*8114151	Special Shoulder Bolt
8	8110430	Motor Cradle
9	8112182	Flex Plate
10	8182149	5/16 x 3/4 HHC Screw
11	8114326	Laser Housing Assembly
12	8106301	1/4" Hex Self-Tap Screw
13	8111552	Motor Shroud Assembly
14	8308536	Motor Gasket
15	8111308	Motor Cover Shield
16	85000710	Motor Replacement Kit (28mm)
	85010010	Motor Replacement Kit (40mm)
17	8114265	Fan Assembly, 220 VAC
18	8110923	Encoder Assembly
19	8113560	Carbon Bushing
20	8113561	Brush Spring
21	8307008	Piezo Spring
22	8308036	Piezo Spring Retainer
23	8301035	3/8-16 Nyloc Nut
24	8114243	Modified Screw
25	8182025	1/4" Ball
26	8114239	Laser Bracket
27	8114237	3/8 x 2 Dowel
28	8114241	Knob
29	8114242	Plastic Washer
30	902308	1/4" Set Screw
31	8301067	#6-32 x 0.38 PPHMS Screw
32	85009972	Motor Encoder
33	85009971	Encoder Drive Shaft

* Before S/N 0606304914 use 8120325

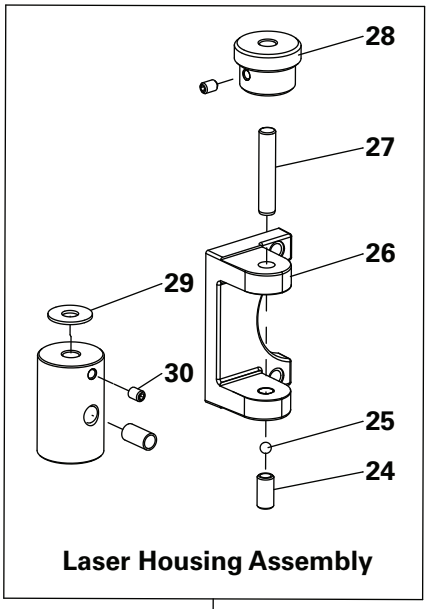

Laser Housing Assembly

11

Pod & Touch Panel Assemblies

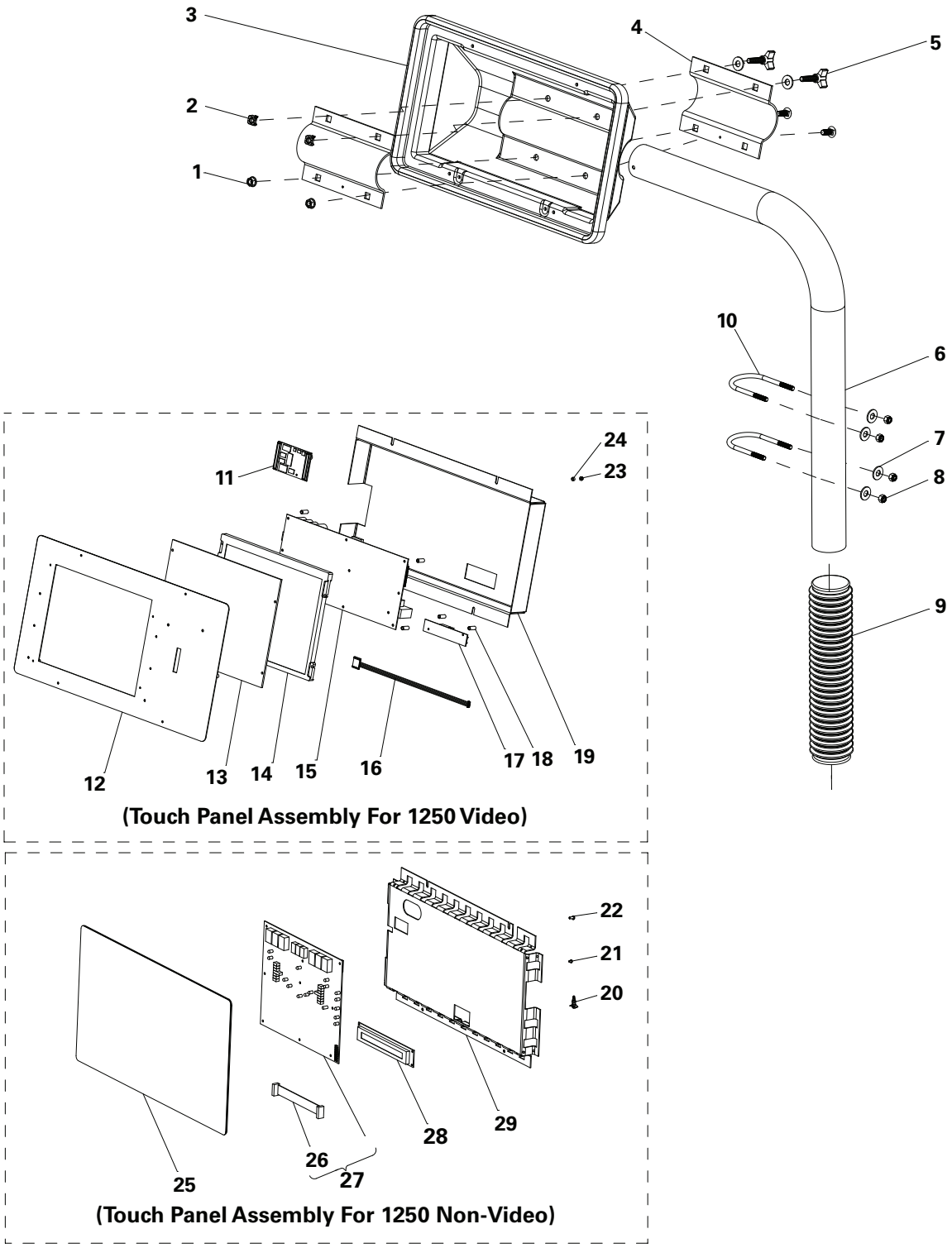

(Pod & Touch Panel Assemblies)

ITEM	PART NO.	DESCRIPTION
1	8111055	Nut, #6-32 Acorn
2	8143044	3/8-16 Tinnerman Nut
3	8111031	Pod Electronics Sub Assembly
4	8110795	Pod Mounting Bracket
5	8110823	3/8-16 Carriage Bolt
6	8110805	Support, Pod Tube
7	8301032	3/8 Flat Washer
8	8181183	5/16-18 Nyloc Nut
9	8110800	Pod Tube Cover
10	8110789	Bolt, 5/16-18 "U"
11	85000116	Single Board Computer
12	85000398	Touch Panel (1250/1255 3DV)
13	85000393	Lexan Shield Kit
14	85000392	LCD Kit
15	85000049	LCD Driver 12503DV PCB
16	85000307	Inverter Cable Assembly
17	85000115	AC to DC Inverter
18	85000327	Aluminum Stand Off
19	85000306	EMC Shield
20	85000361	Snap-Lock Standoff
21	928487	4-40 x 3/16 Pan Hd. Screw
22	8301067	6-32 Phillip Hd. Screw
23	85000357	Nylok #4-40 Nut
24	85000356	Lexan Shield - LCD Screen
25	85010013	Touch Panel (1250 2D/3D)
	85606425	Touch Panel (1255 3D)
26	8114313	VFD Cable Only
27	85000846	PCB Display & Cable Assembly
28	8114302	Vacuum Fluoresent Display
29	8113624	EMC Shield, UL Model (Austr. Export)

Power Panel & MCB

ITEM	PART NO.	DESCRIPTION
1	8112356	Capacitor
3	8111860	Capacity Panel Assembly
4	8110821	Power Panel
5	85000361	Stand-off, Snaplock
6	8114412	Motor Control PCB (Non-Inverter Model)
	85606375	Motor Control PCB (Inverter Model)
7	8305076	220V, 1 PH Plug
	8140786	220V, 3 PH Plug
	8114410	440V, 3 PH Plug (Export)
8	8113845	EMI Line Filter (Austr. Export)
9	906058	Strain Relief
10	8305802	ON/OFF Switch
11	928347	Hole Plug
12	8301082	#8-32x1/2 PHM Screw
13	85000264	Power Supply Assembly (Video)
14	8113101	Power Cord Assembly, 1 PH
	8143127	Power Cord Assembly, 3 PH
	8114417	Power Cord Assy (440 V Export)
15	8114184	Cover
16	8113907	Processor PCB
17	8301804	#10-32 Hex Nut
18	8114420	Filter Wire Assembly (Austr. Export)
19	8114211	Cat 5, 2 Meter Lg. Cable
20	8114260	Piezo Harness Assembly
21A	8114430	Encoder Cable Assy (Non-Inverter Model, 1250-2D or Present 1250-3DV 28mm)
21B	85009988	Hood Switch Cable Assembly (Inverter Model, 1250-3D or 1250-3DV)
22	8114208	240 VAC Harness Assembly
	8114420	440 VAC Harness Assy (Export)
23	8114260	Harness Assembly
24	8114212	Drain Wire Assembly
25	85000705	Motor Module Assembly
26	8309057	Wire Assembly
27	8309005	Wire Assembly
28	85606582	Trim Strip

2D & 3DV Non-inverter Drive Models

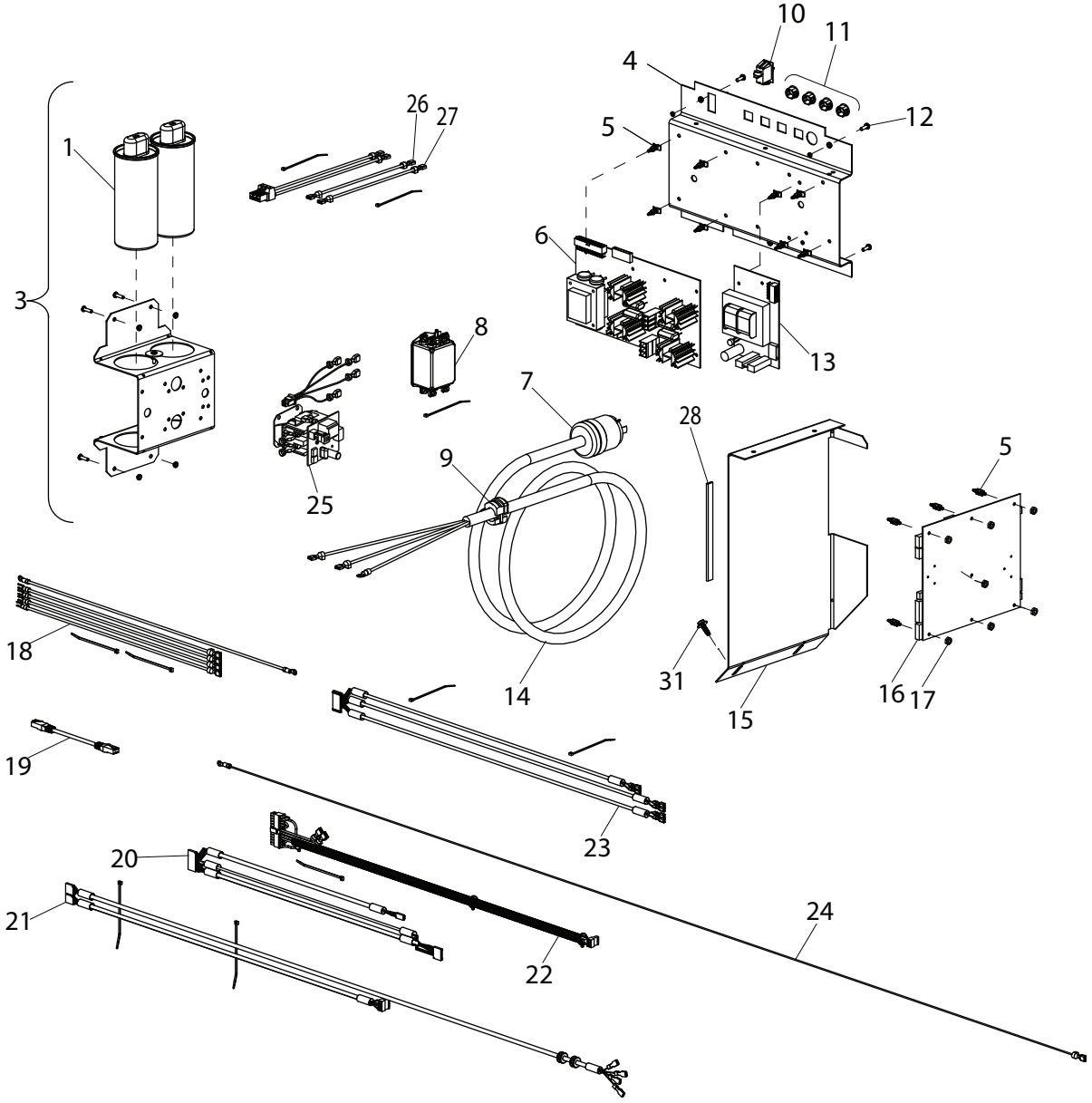

(Power Panel & MCB Assemblies)

ITEM	PART NO.	DESCRIPTION
28	8112208	8-32 Male, 3/8" Standoff
29	85009993	Interface, Inverter Card
30	85010029	#2-56 x 1/4 PPHMS Screw
31	8106301	1/4-20 x 3/4, HWHST Screw
32	85009994	Interface, SLR Card
33	85009999	Harness Wire Cover
35	85009973	Inverter
36	8114259	MCB Cable Assembly
37	85010025	Interface, Encoder Cable
38	85000305	SNR Cable Assy
39	85010022	Motor Harness Wire Assembly
40	85010024	GRND Wire Assembly, 26"
41	85010014	Interface, Inverter, Encoder Cable
42	85010030	#2-56 Hex Nut

3D & 3DV Inverter Drive Models

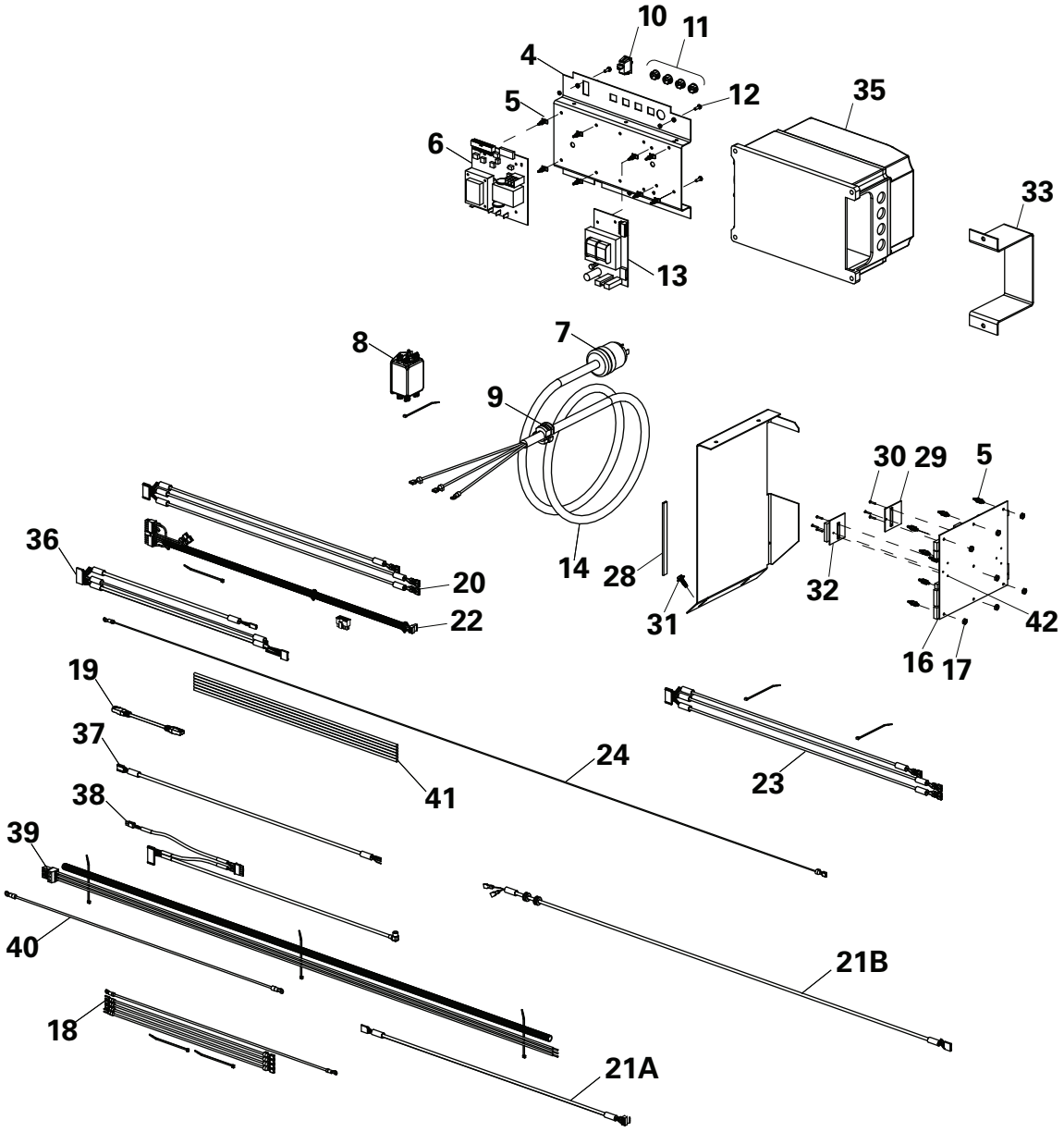

 © Copyright 2005 Hennessy Industries and COATS® All Rights Reserved Printed in USA